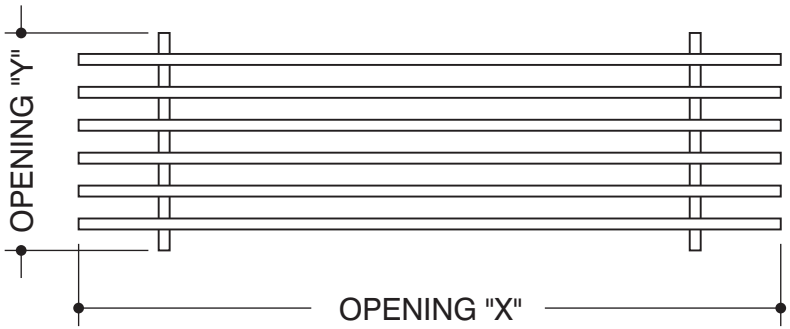

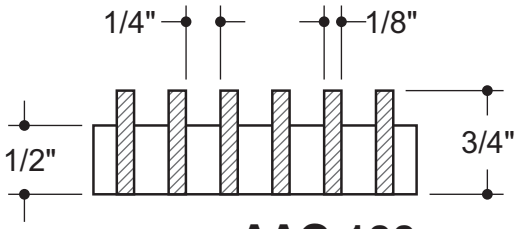

AAG 100
CORE ONLY

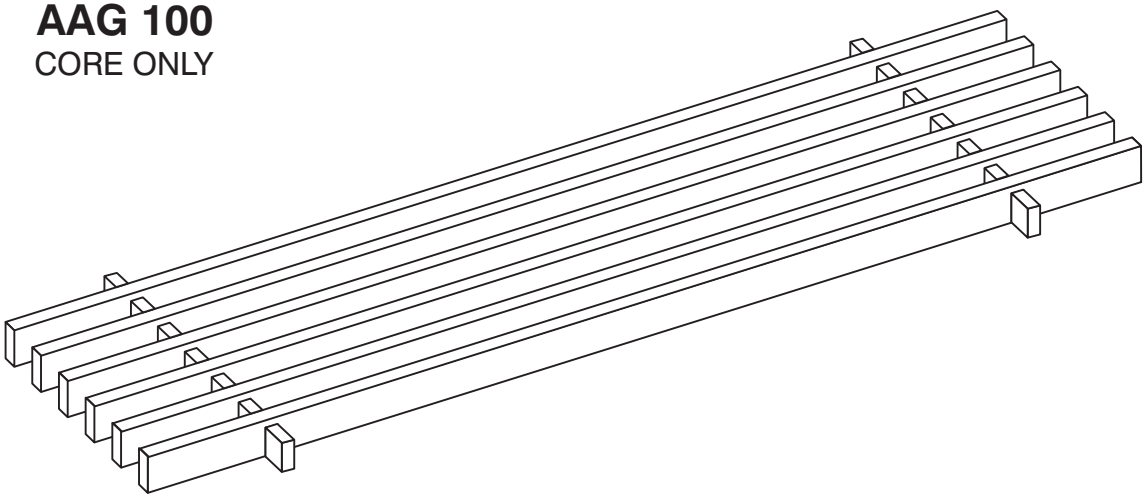

CORE STYLE
AAG-100

FRAME STYLE
Core Only

MATERIAL:

FINISH:

DEPTH: **3/4”**

OPENING SIZES

QTY	X	Y

CUSTOMER:	PROJECT:	NOTES:
CONTACT:	ARCHITECT:	
	ENGINEER:	
PHONE:	CONTRACTOR:	

Custom
Architectural Grilles
& Metalwork

ADVANCED ARCH GRILLES
149 Denton Avenue, New Hyde Park, NY 11040
Voice: 516-488-0628 Fax: 516-488-0728
Email: sales@aagrilles.com

JOB #:

QUOTE #:

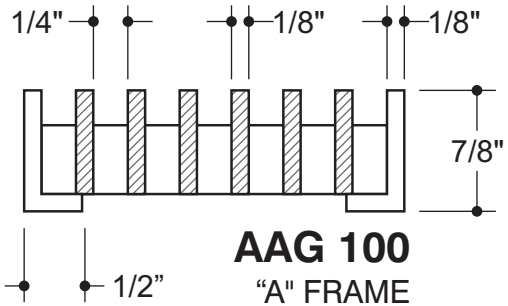

AAG 100
“A" FRAME

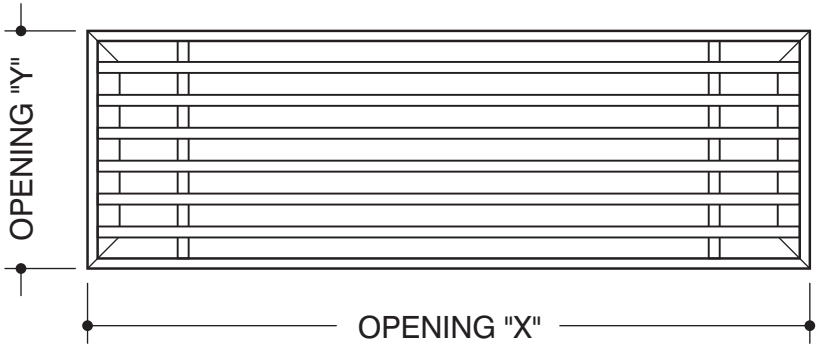

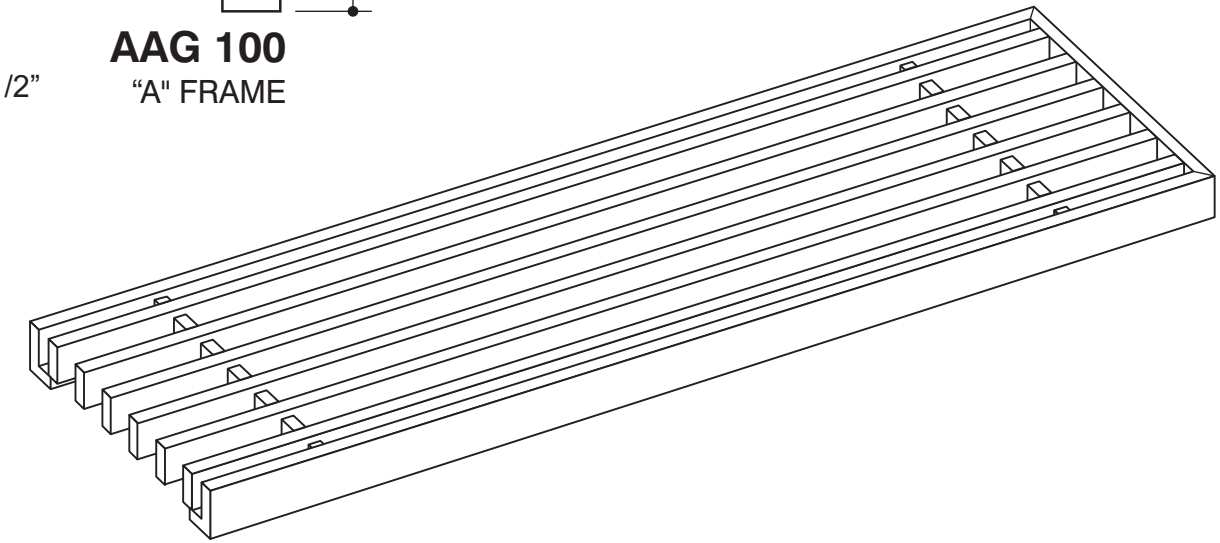

CORE STYLE
AAG-100

FRAME STYLE
"A"-frame

MATERIAL:

FINISH:

DEPTH: **7/8”**

OPENING SIZES

QTY	X	Y

CUSTOMER:	PROJECT:	NOTES:
CONTACT:	ARCHITECT:	
	ENGINEER:	
PHONE:	CONTRACTOR:	

Custom
Architectural Grilles
& Metalwork

ADVANCED ARCH GRILLES
149 Denton Avenue, New Hyde Park, NY 11040
Voice: 516-488-0628 Fax: 516-488-0728
Email: sales@aagrilles.com

JOB #:

QUOTE #:

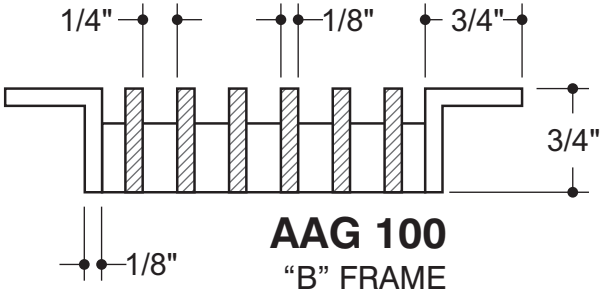

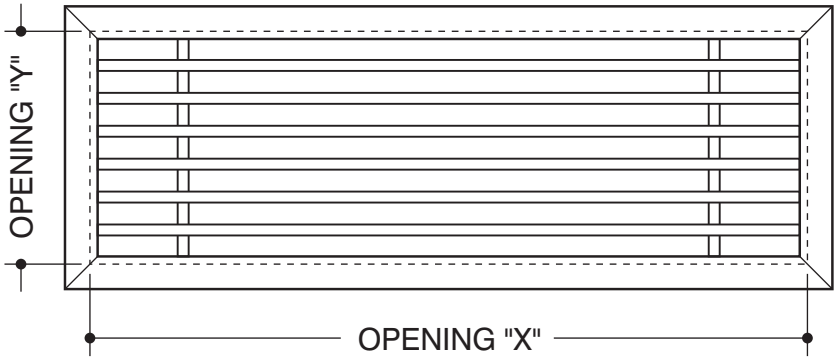

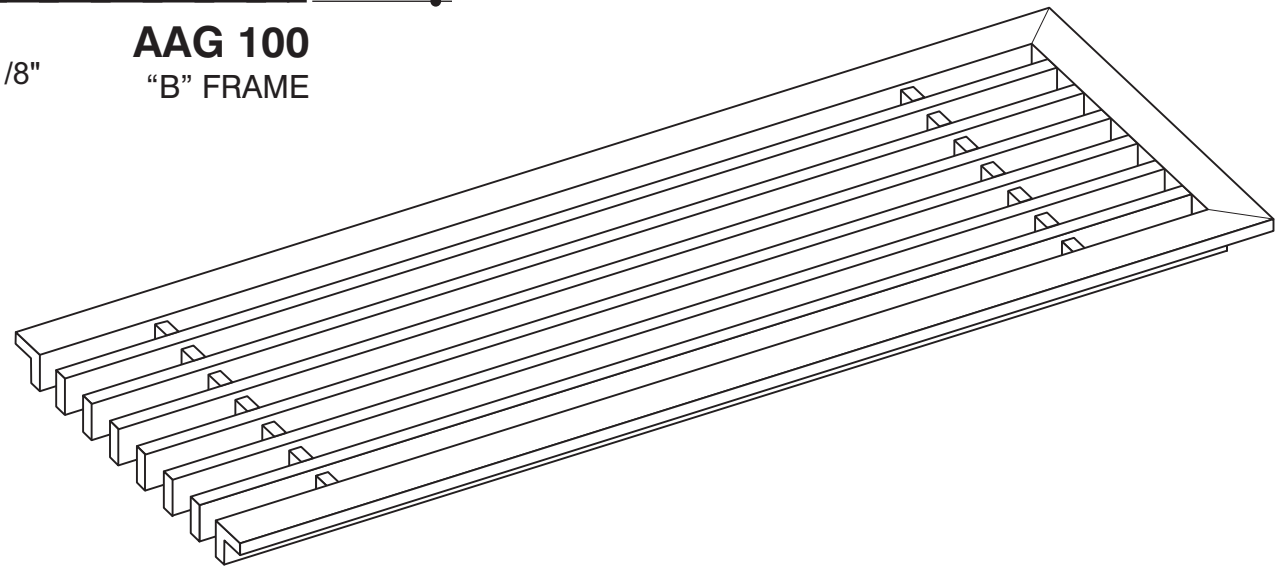

CORE STYLE
AAG-100

FRAME STYLE
"B"-frame

MATERIAL:

FINISH:

DEPTH: **3/4"**

OPENING SIZES

QTY	X	Y

CUSTOMER:	PROJECT:	NOTES:
CONTACT:	ARCHITECT:	
	ENGINEER:	
PHONE:	CONTRACTOR:	

Custom
Architectural Grilles
& Metalwork

ADVANCED ARCH GRILLES
149 Denton Avenue, New Hyde Park, NY 11040
Voice: 516-488-0628 Fax: 516-488-0728
Email: sales@aagrilles.com

JOB #:

QUOTE #:

www.aagrilles.com

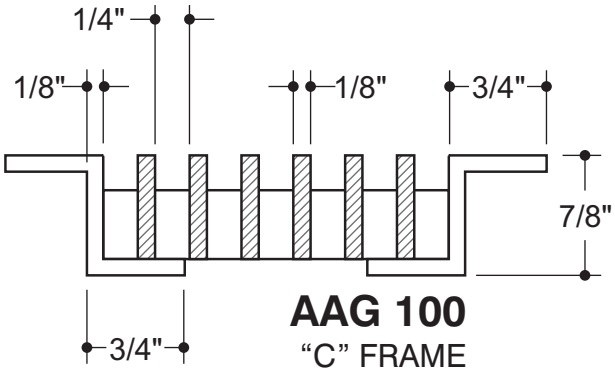

AAG 100
"C" FRAME

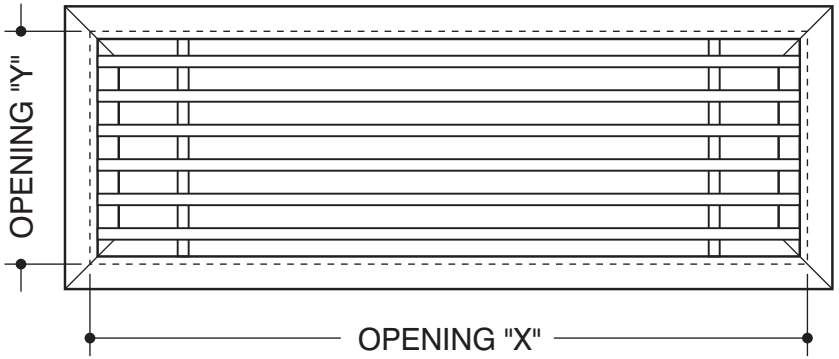

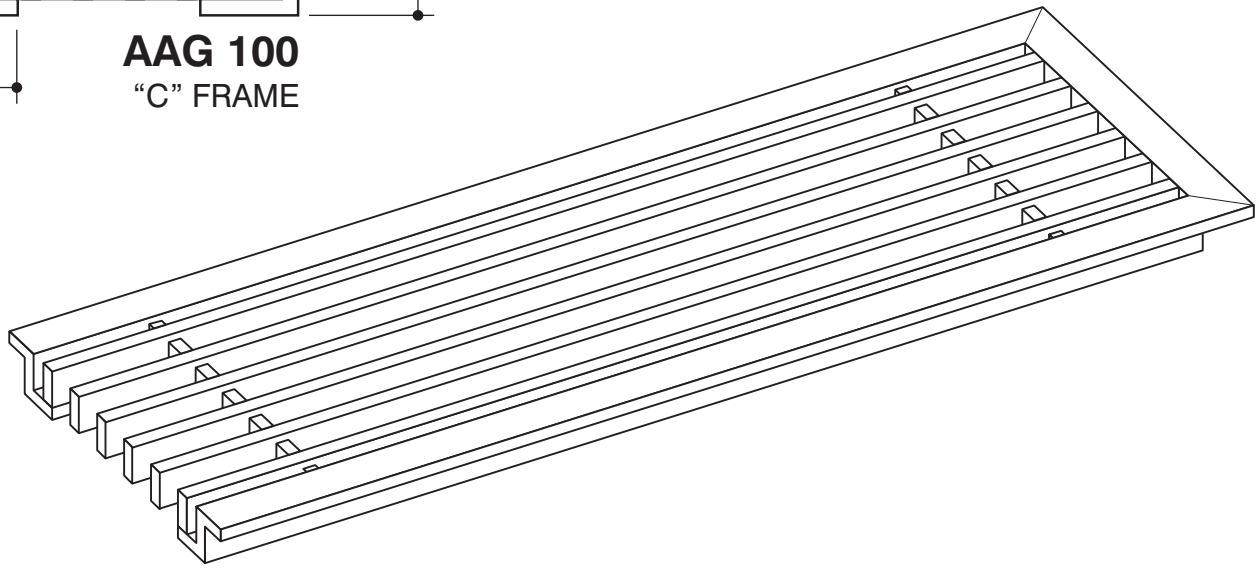

CORE STYLE
AAG-100

FRAME STYLE
"C"-frame

MATERIAL:

FINISH:

DEPTH: **7/8"**

OPENING SIZES

QTY	X	Y

CUSTOMER:	PROJECT:	NOTES:
CONTACT:	ARCHITECT:	
	ENGINEER:	
PHONE:	CONTRACTOR:	

Custom
Architectural Grilles
& Metalwork

ADVANCED ARCH GRILLES
149 Denton Avenue, New Hyde Park, NY 11040
Voice: 516-488-0628 Fax: 516-488-0728
Email: sales@aagrilles.com

JOB #:

QUOTE #:

www.aagrilles.com

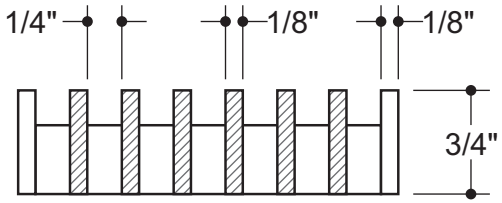

AAG 100
BAND FRAME

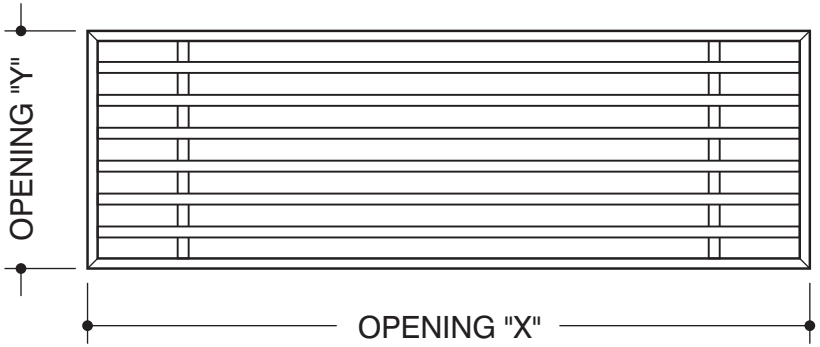

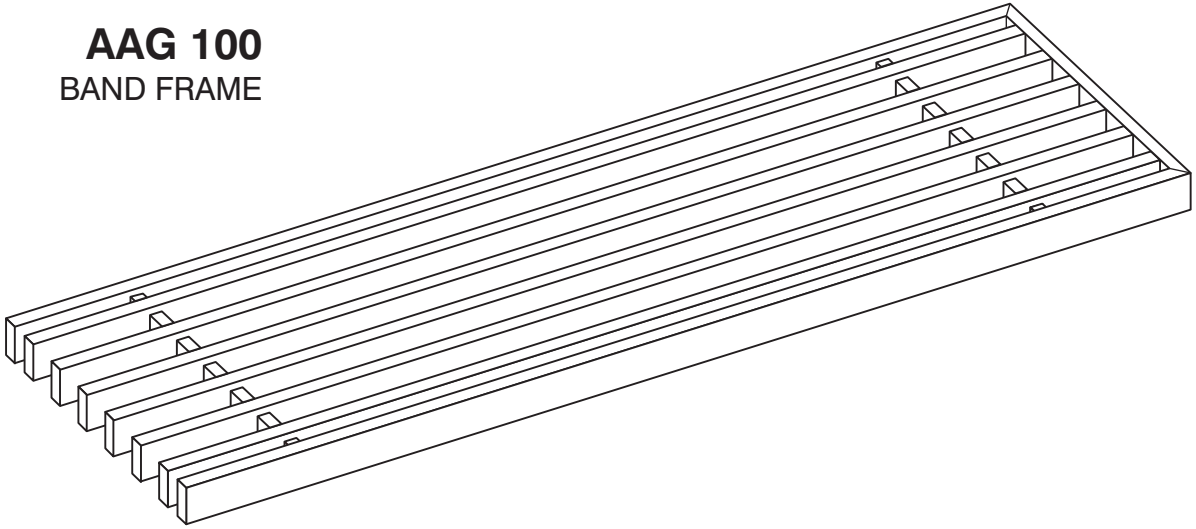

CORE STYLE
AAG-100

FRAME STYLE
Band Frame

MATERIAL:

FINISH:

DEPTH: **3/4”**

OPENING SIZES

QTY	X	Y

CUSTOMER:	PROJECT:	NOTES:
CONTACT:	ARCHITECT:	
	ENGINEER:	
PHONE:	CONTRACTOR:	

Custom
Architectural Grilles
& Metalwork

ADVANCED ARCH GRILLES
149 Denton Avenue, New Hyde Park, NY 11040
Voice: 516-488-0628 Fax: 516-488-0728
Email: sales@aagrilles.com

JOB #:

QUOTE #:

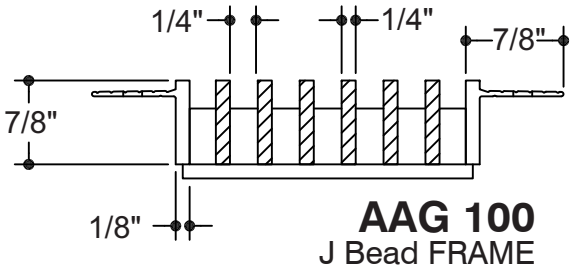

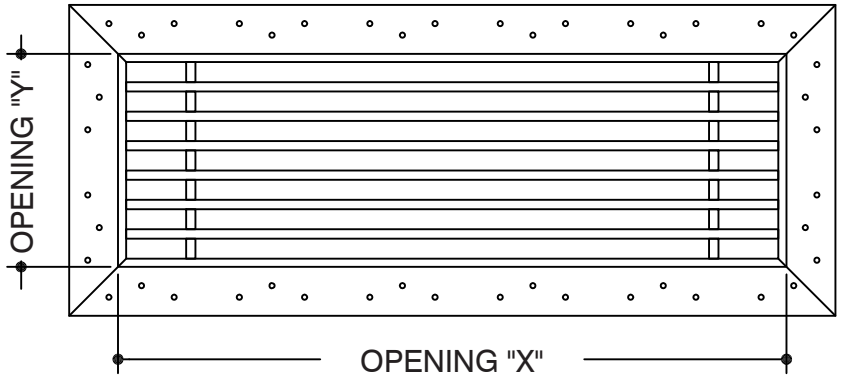

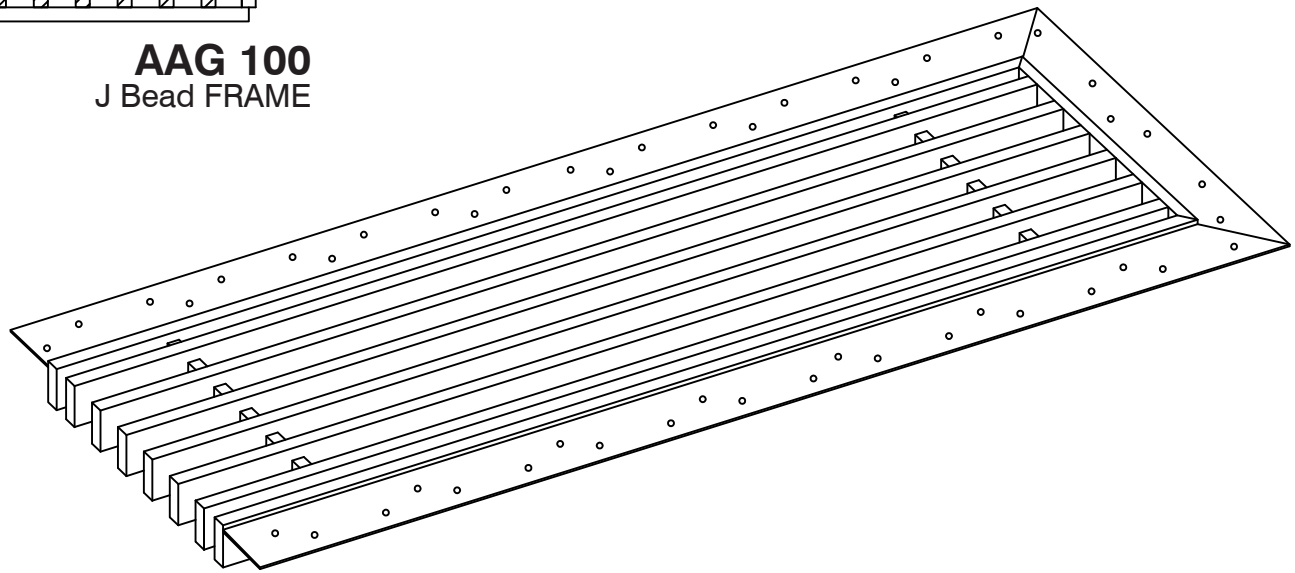

CORE STYLE
AAG-100

FRAME STYLE
J Bead

MATERIAL:

FINISH:

DEPTH: **7/8”**

OPENING SIZES

QTY	X	Y

CUSTOMER:	PROJECT:	NOTES:
CONTACT:	ARCHITECT:	
	ENGINEER:	
PHONE:	CONTRACTOR:	

Custom
Architectural Grilles
& Metalwork

Artistry in Architectural Grilles by Advanced Arch Grilles
149 Denton Avenue, New Hyde Park, NY 11040
Voice: 516-488-0628 Fax: 516-488-0728
Email: sales@aagrilles.com

JOB #:

QUOTE #: