CORE STYLE
AAG-110

FRAME STYLE
Core Only

MATERIAL:

FINISH:

DEPTH: **3/4”**

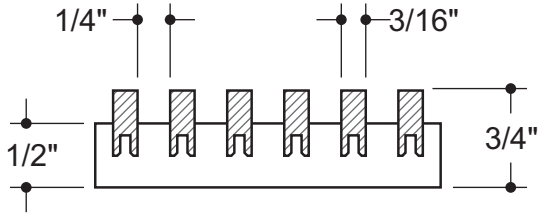

AAG 110
CORE ONLY

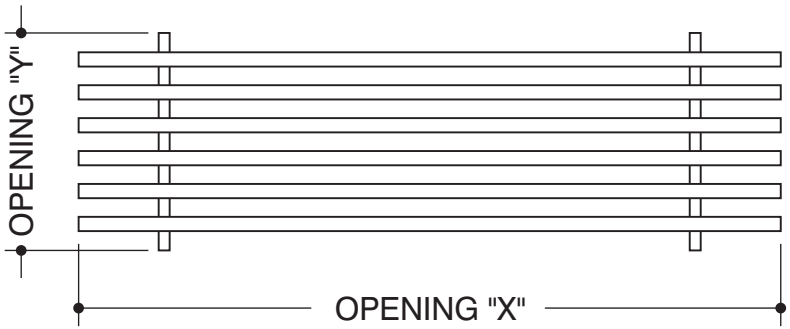

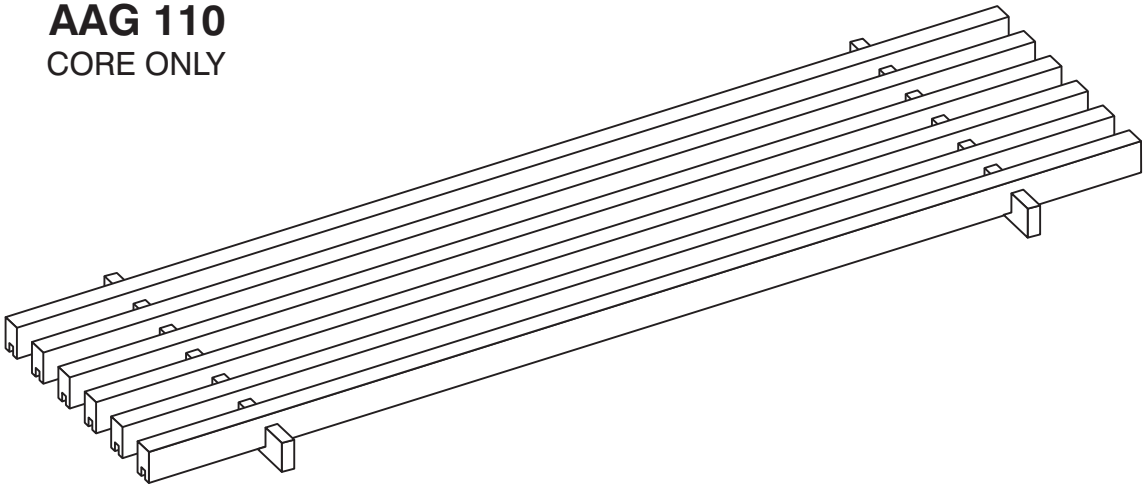

OPENING SIZES

QTY	X	Y

CUSTOMER:	PROJECT:	NOTES:
CONTACT:	ARCHITECT:	
	ENGINEER:	
PHONE:	CONTRACTOR:	

Artistry *in* Architectural Grilles *by* Advanced Architectural Grilleworks

ADVANCED ARCH GRILLES
149 Denton Avenue, New Hyde Park, NY 11040
Voice: 516-488-0628 Fax: 516-488-0728
Email: sales@aagrilles.com

JOB #:

QUOTE #:

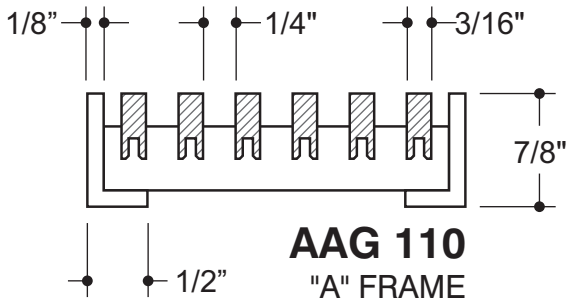

AAG 110
"A" FRAME

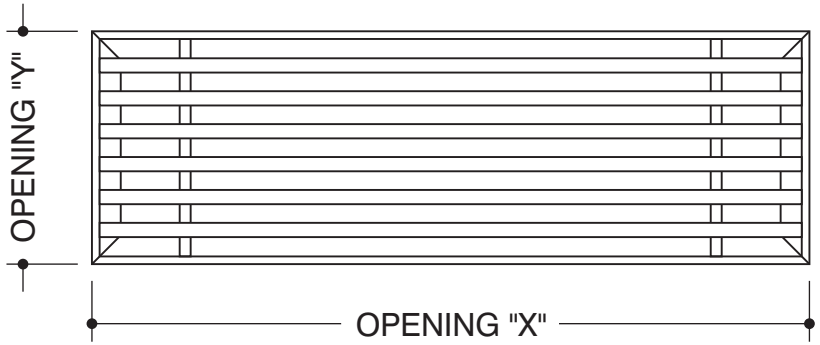

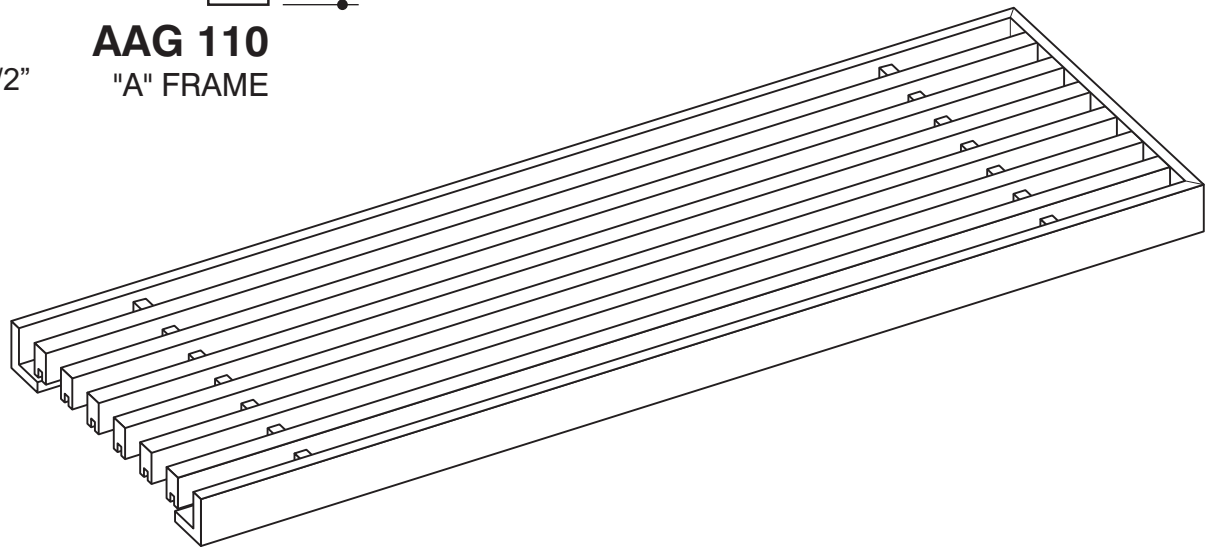

CORE STYLE
AAG-110

FRAME STYLE
"A"-frame

MATERIAL:

FINISH:

DEPTH: **7/8”**

OPENING SIZES

QTY	X	Y

CUSTOMER:	PROJECT:	NOTES:
CONTACT:	ARCHITECT:	
PHONE:	ENGINEER:	
	CONTRACTOR:	

Artistry *in* Architectural Grilles *by* Advanced Architectural Grilleworks

ADVANCED ARCH GRILLES
149 Denton Avenue, New Hyde Park, NY 11040
Voice: 516-488-0628 Fax: 516-488-0728
Email: sales@aagrilles.com

JOB #:

QUOTE #:

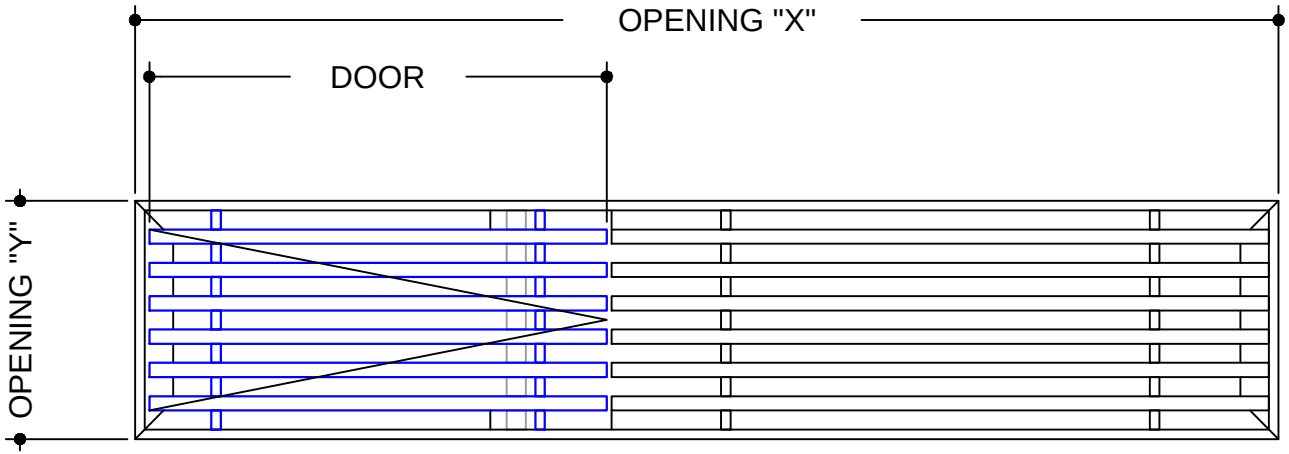

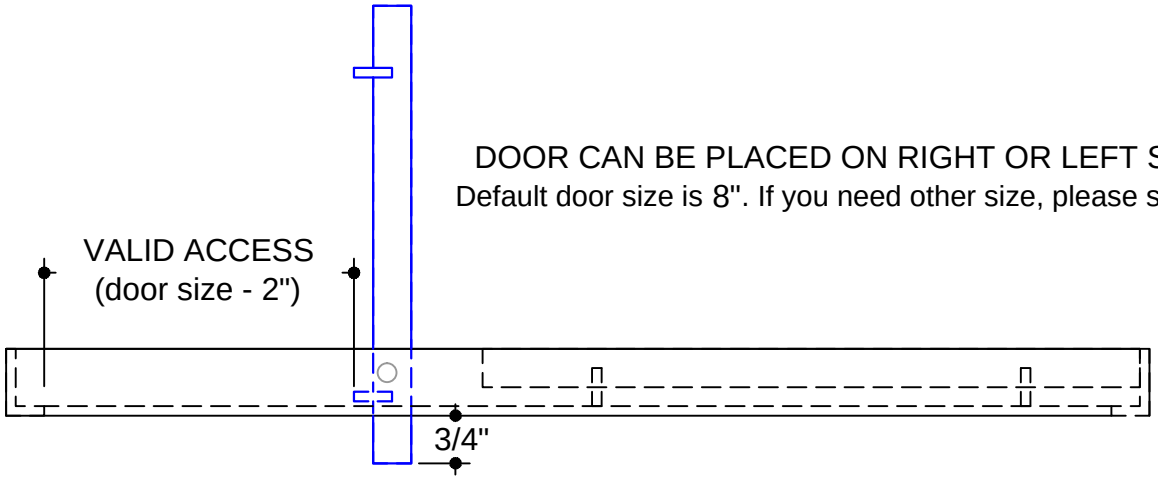

DOOR CAN BE PLACED ON RIGHT OR LEFT SIDE

Default door size is 8". If you need other size, please specify.

CORE STYLE

AAG-110

FRAME STYLE

"A"-frame

MATERIAL:

FINISH:

DEPTH: **7/8”**

DOOR SIZE:

OPENING SIZES

QTY	X	Y

CUSTOMER:	PROJECT:	NOTES:
CONTACT:	ARCHITECT:	
	ENGINEER:	
PHONE:	CONTRACTOR:	

Artistry *in* Architectural Grilles *by* Advanced Architectural Grilleworks

ADVANCED ARCH GRILLES
149 Denton Avenue, New Hyde Park, NY 11040
Voice: 516-488-0628 Fax: 516-488-0728
Email: sales@aagrilles.com

JOB #:

QUOTE #:

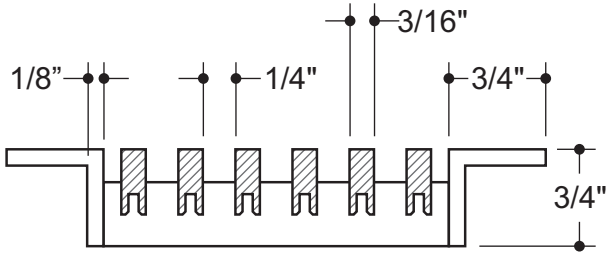

AAG 110
"B" FRAME

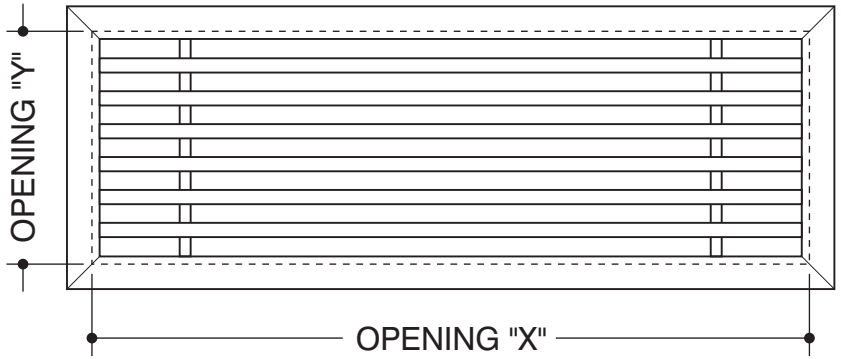

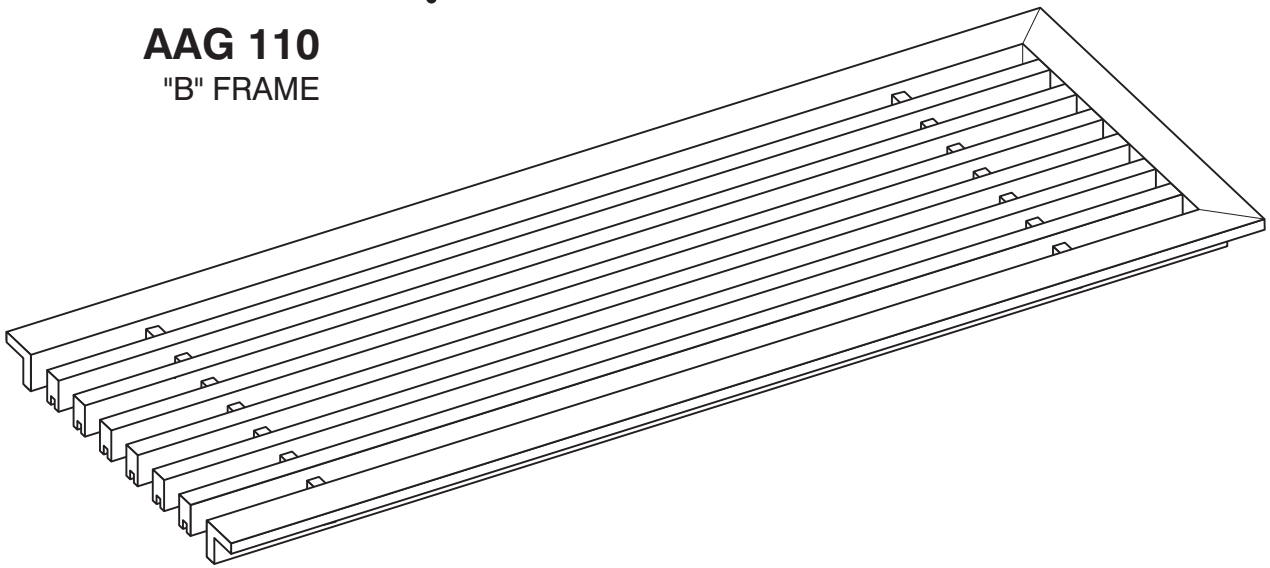

CORE STYLE
AAG-110

FRAME STYLE
"B"-frame

MATERIAL:

FINISH:

DEPTH: **3/4”**

OPENING SIZES

QTY	X	Y

CUSTOMER:	PROJECT:	NOTES:
CONTACT:	ARCHITECT:	
	ENGINEER:	
PHONE:	CONTRACTOR:	

Artistry *in* Architectural Grilles *by* Advanced Architectural Grilleworks

ADVANCED ARCH GRILLES
149 Denton Avenue, New Hyde Park, NY 11040
Voice: 516-488-0628 Fax: 516-488-0728
Email: sales@aagrilles.com

JOB #:

QUOTE #:

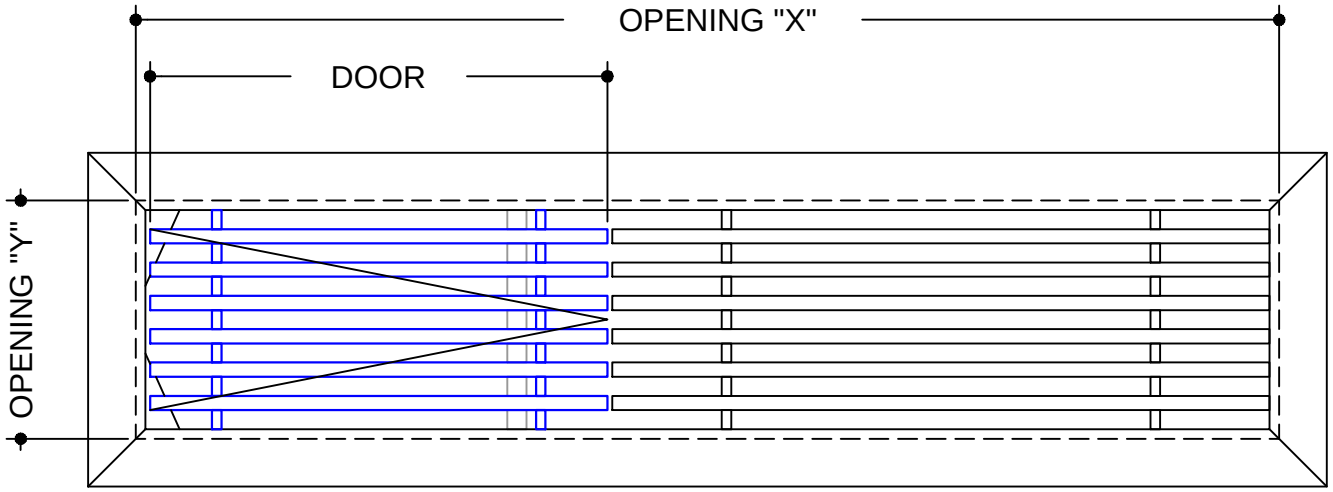

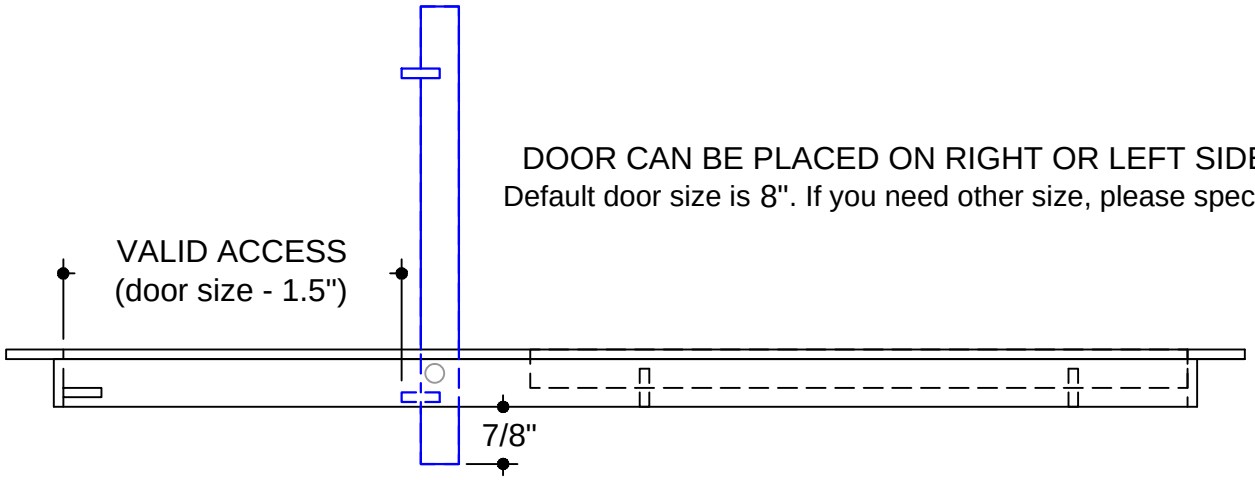

DOOR CAN BE PLACED ON RIGHT OR LEFT SIDE

Default door size is 8". If you need other size, please specify.

CORE STYLE

AAG-110

FRAME STYLE

"B"-frame

MATERIAL:

FINISH:

DEPTH: **3/4”**

DOOR SIZE:

OPENING SIZES

QTY	X	Y

CUSTOMER:	PROJECT:	NOTES:
CONTACT:	ARCHITECT:	
PHONE:	ENGINEER:	
	CONTRACTOR:	

Artistry *in* Architectural Grilles *by* Advanced Architectural Grilleworks

ADVANCED ARCH GRILLES
149 Denton Avenue, New Hyde Park, NY 11040
Voice: 516-488-0628 Fax: 516-488-0728
Email: sales@aagrilles.com

JOB #:

QUOTE #:

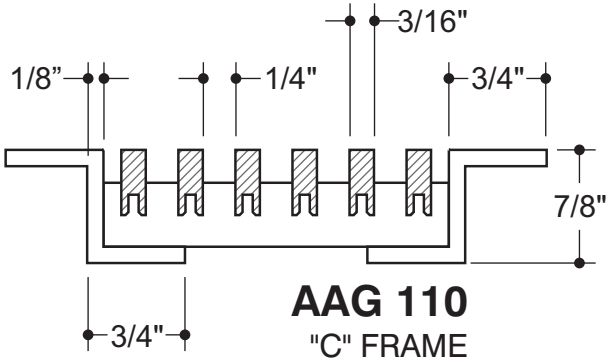

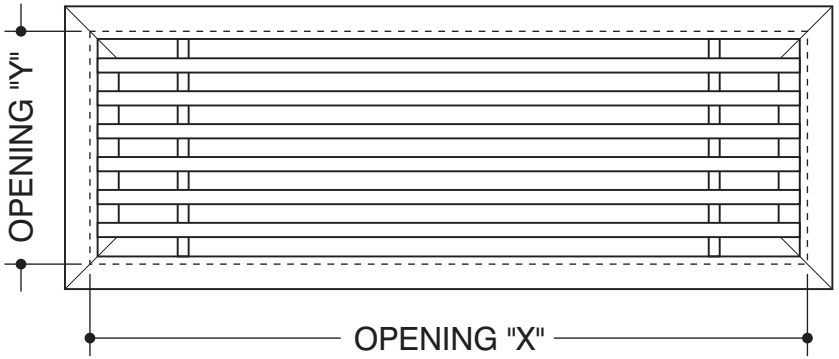

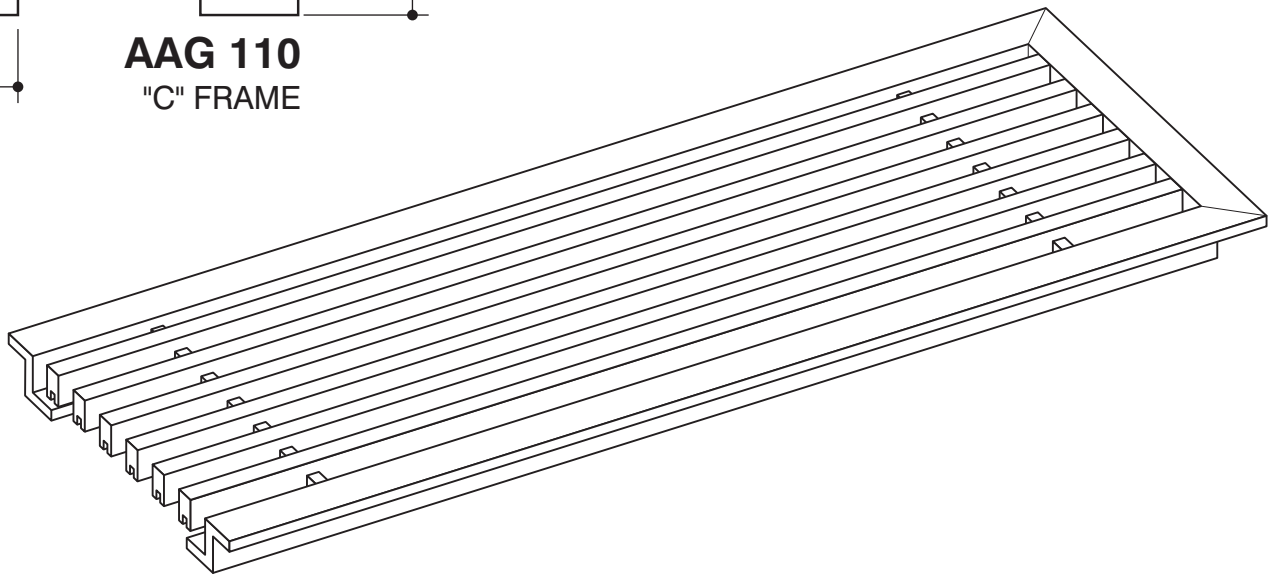

CORE STYLE
AAG-110

FRAME STYLE
"C"-frame

MATERIAL:

FINISH:

DEPTH: **7/8”**

OPENING SIZES

QTY	X	Y

CUSTOMER:	PROJECT:	NOTES:
CONTACT:	ARCHITECT:	
PHONE:	ENGINEER:	
	CONTRACTOR:	

Artistry *in* Architectural Grilles *by* Advanced Architectural Grilleworks

ADVANCED ARCH GRILLES
149 Denton Avenue, New Hyde Park, NY 11040
Voice: 516-488-0628 Fax: 516-488-0728
Email: sales@aagrilles.com

JOB #:

QUOTE #:

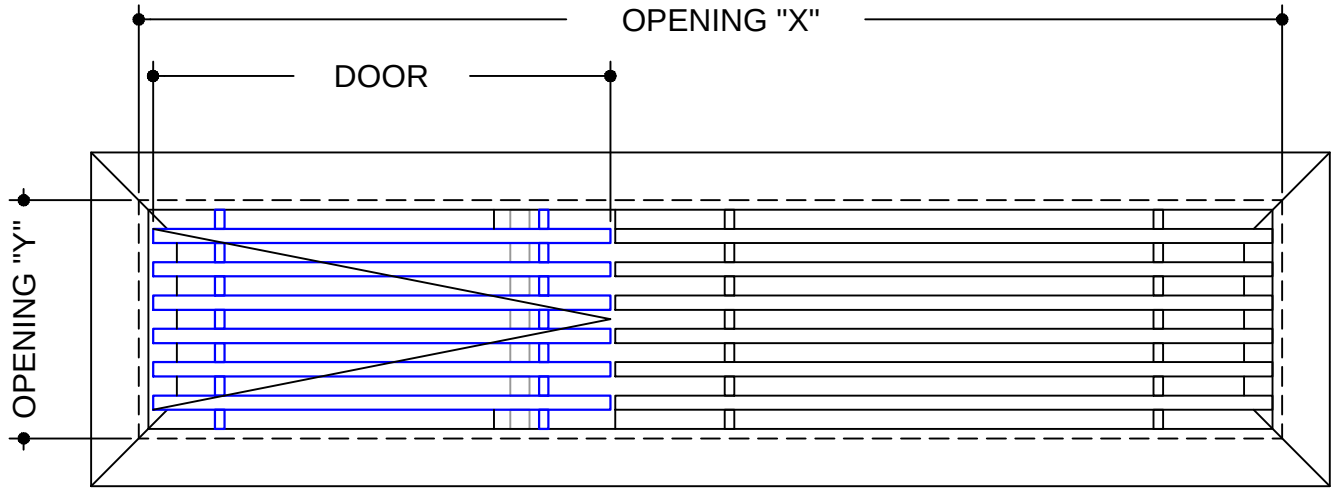

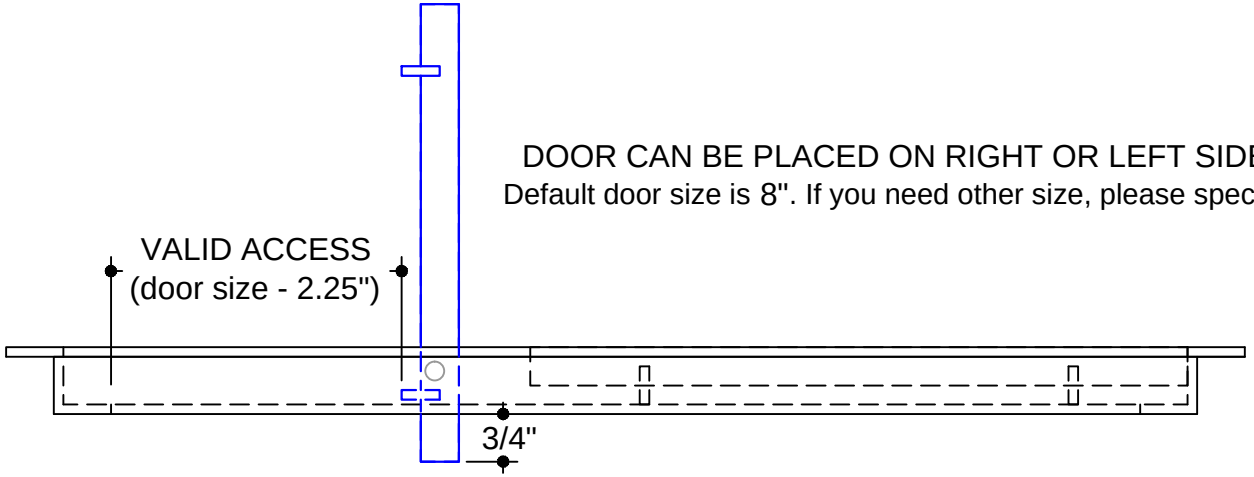

DOOR CAN BE PLACED ON RIGHT OR LEFT SIDE
Default door size is 8". If you need other size, please specify.

CORE STYLE
AAG-110

FRAME STYLE
"C"-frame

MATERIAL:

FINISH:

DEPTH: **7/8”**

DOOR SIZE:

OPENING SIZES

QTY	X	Y

CUSTOMER:	PROJECT:	NOTES:
CONTACT:	ARCHITECT:	
PHONE:	ENGINEER:	
	CONTRACTOR:	

Artistry *in* Architectural Grilles *by* Advanced Architectural Grilleworks

ADVANCED ARCH GRILLES
149 Denton Avenue, New Hyde Park, NY 11040
Voice: 516-488-0628 Fax: 516-488-0728
Email: sales@aagrilles.com

JOB #:

QUOTE #:

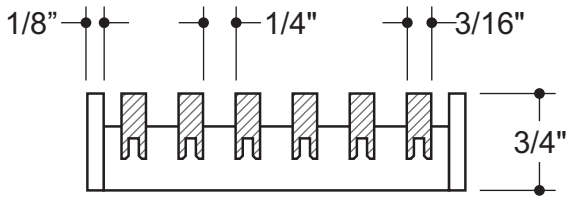

AAG 110
BAND FRAME

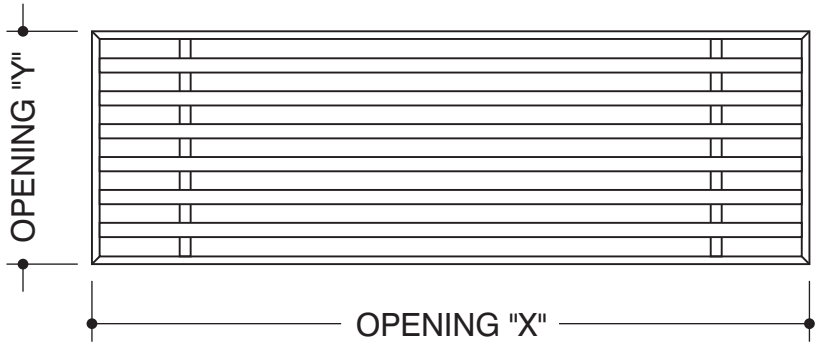

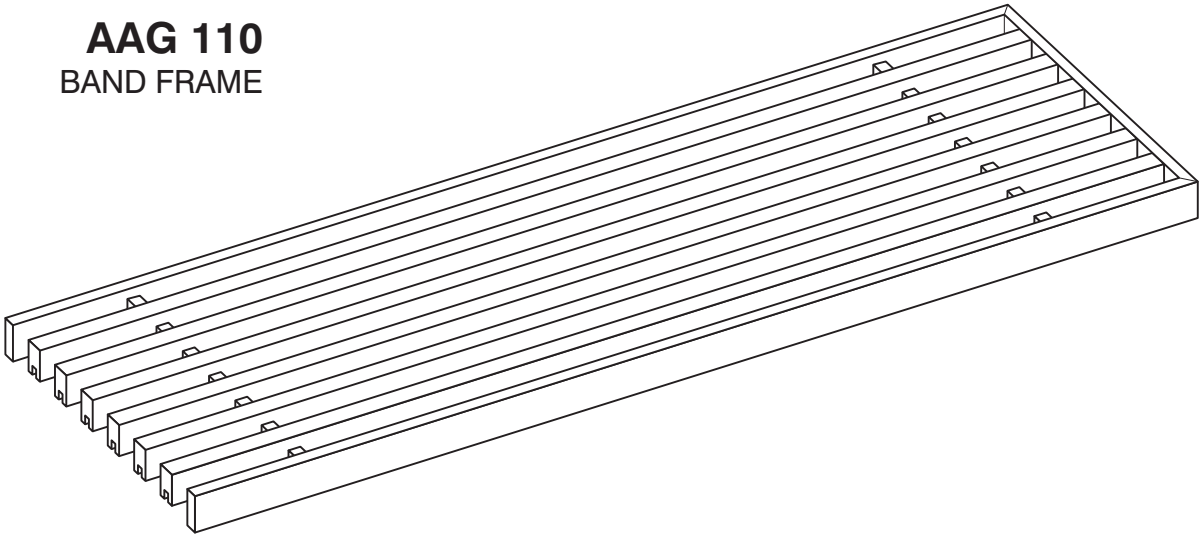

CORE STYLE
AAG-110

FRAME STYLE
Band Frame

MATERIAL:

FINISH:

DEPTH: **3/4”**

OPENING SIZES

QTY	X	Y

CUSTOMER:	PROJECT:	NOTES:
CONTACT:	ARCHITECT:	
	ENGINEER:	
PHONE:	CONTRACTOR:	

Artistry *in* Architectural Grilles *by* Advanced Architectural Grilleworks

ADVANCED ARCH GRILLES
149 Denton Avenue, New Hyde Park, NY 11040
Voice: 516-488-0628 Fax: 516-488-0728
Email: sales@aagrilles.com

JOB #:

QUOTE #:

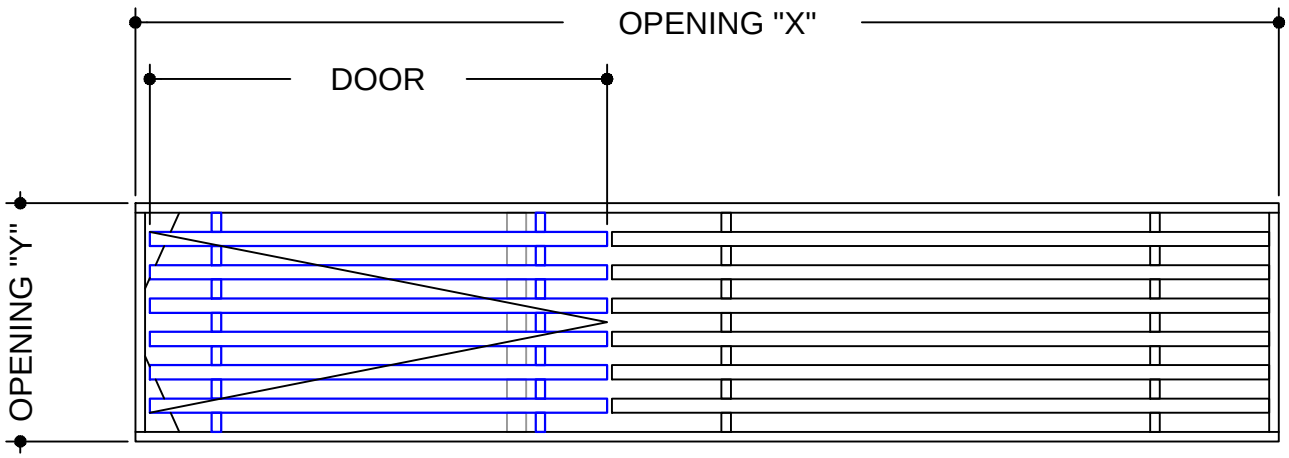

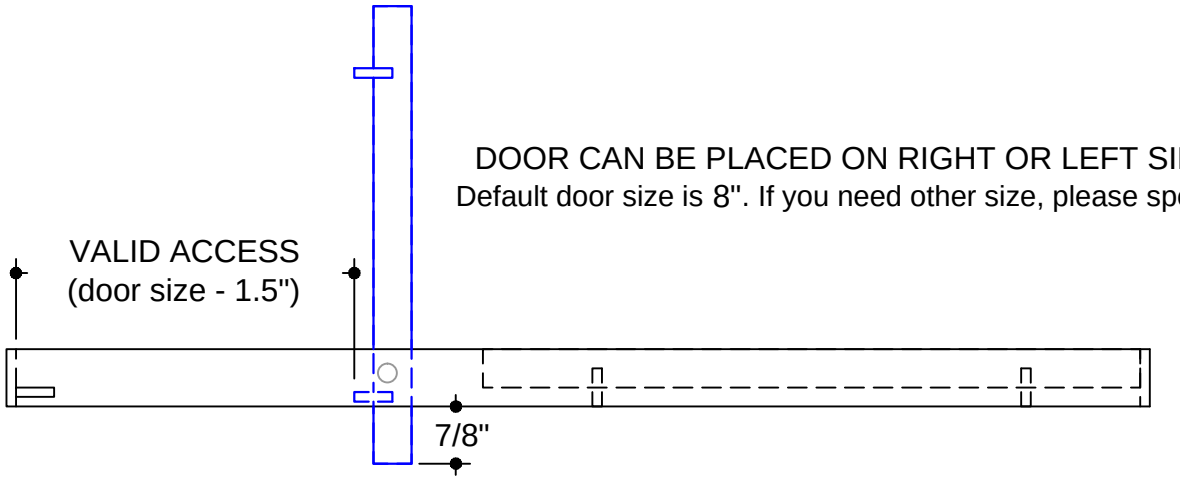

DOOR CAN BE PLACED ON RIGHT OR LEFT SIDE
Default door size is 8". If you need other size, please specify.

CORE STYLE
AAG-110

FRAME STYLE
Band Frame

MATERIAL:

FINISH:

DEPTH: **3/4”**

DOOR SIZE:

OPENING SIZES

QTY	X	Y

CUSTOMER:	PROJECT:	NOTES:
CONTACT:	ARCHITECT:	
	ENGINEER:	
PHONE:	CONTRACTOR:	

Artistry *in* Architectural Grilles *by* Advanced Architectural Grilleworks

ADVANCED ARCH GRILLES
149 Denton Avenue, New Hyde Park, NY 11040
Voice: 516-488-0628 Fax: 516-488-0728
Email: sales@aagrilles.com

JOB #:

QUOTE #:

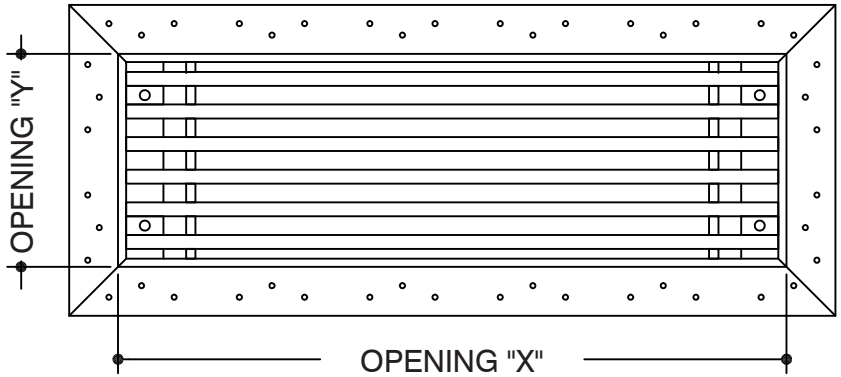

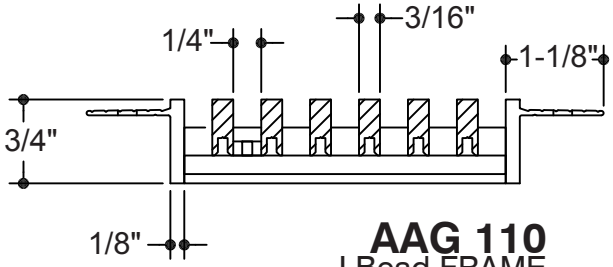

AAG 110
J Bead FRAME

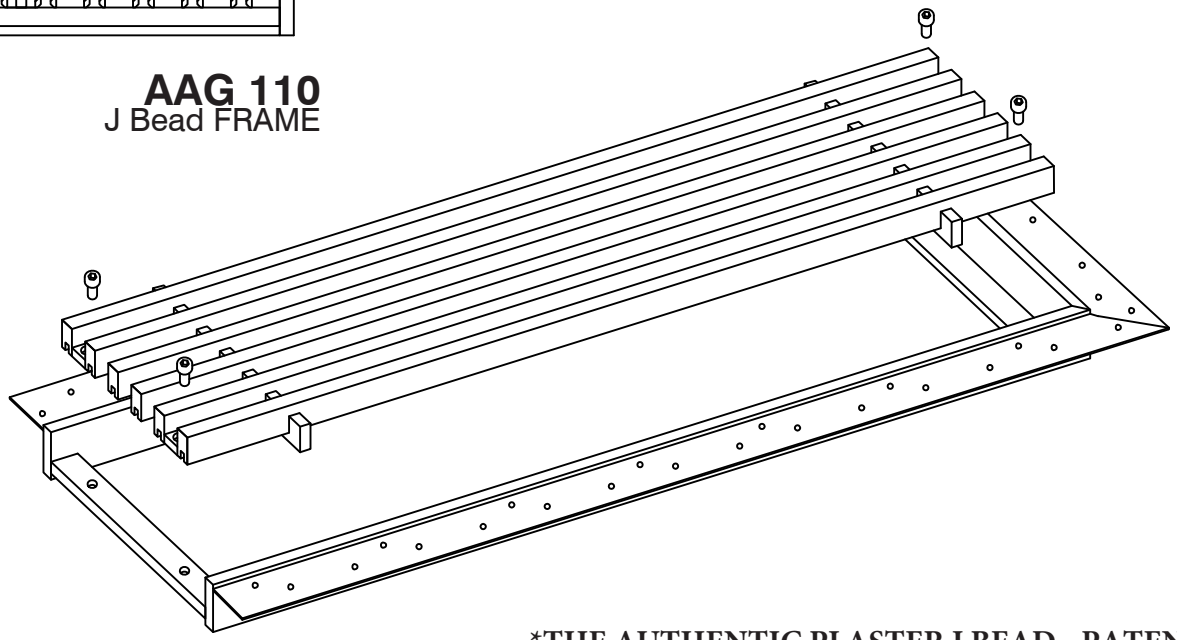

CORE STYLE
AAG-110

FRAME STYLE
J Bead*

MATERIAL:

FINISH:

DEPTH: **3/4”**

DEPTH: **REMOVABLE**

OPENING SIZES

QTY	X	Y

***THE AUTHENTIC PLASTER J BEAD - PATENT # 9,765,988**

CUSTOMER:	PROJECT:	NOTES:
CONTACT:	ARCHITECT:	
	ENGINEER:	
PHONE:	CONTRACTOR:	

Artistry *in* Architectural Grilles *by* Advanced Architectural Grilleworks

ADVANCED ARCH GRILLES
149 Denton Avenue, New Hyde Park, NY 11040
Voice: 516-488-0628 Fax: 516-488-0728
Email: sales@aagrilles.com

JOB #:

QUOTE #: