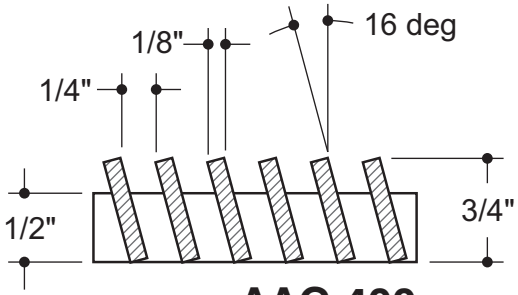

AAG 400
CORE ONLY

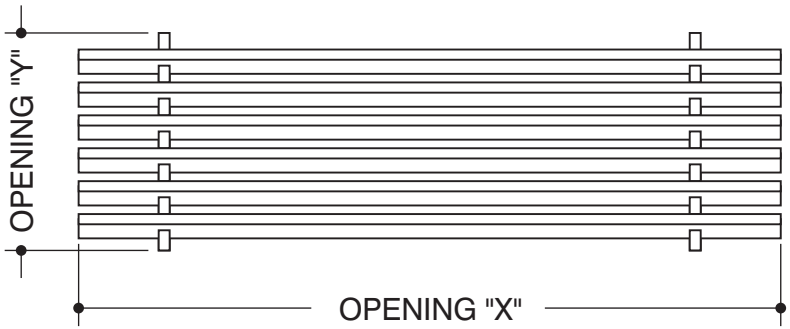

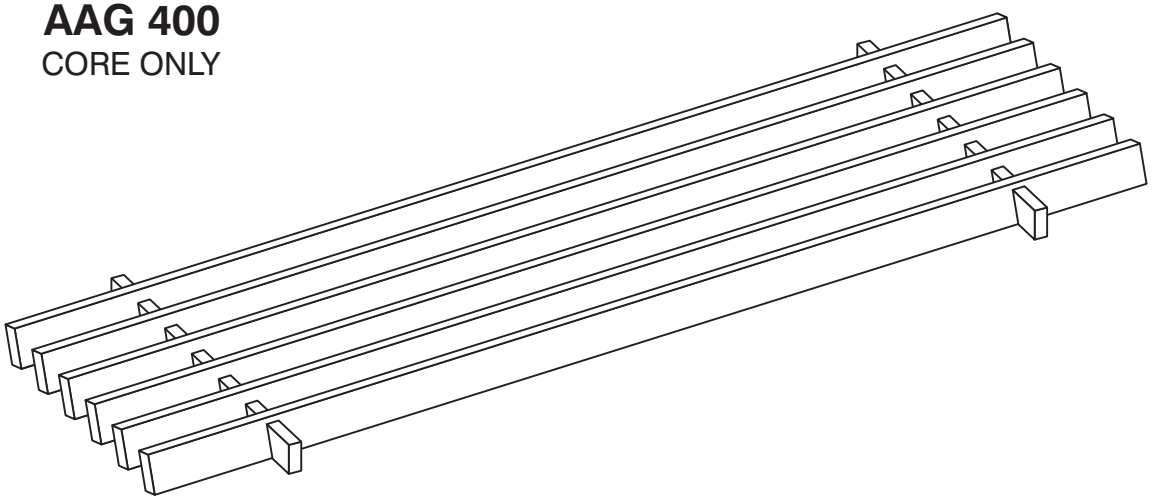

CORE STYLE
AAG-400

FRAME STYLE
Core Only

MATERIAL:

FINISH:

DEPTH: **3/4”**

OPENING SIZES

QTY	X	Y

CUSTOMER:	PROJECT:	NOTES:
CONTACT:	ARCHITECT:	
	ENGINEER:	
PHONE:	CONTRACTOR:	

Artistry *in* Architectural Grilles *by* Advanced Architectural Grilleworks

ADVANCED ARCH GRILLES
149 Denton Avenue, New Hyde Park, NY 11040
Voice: 516-488-0628 Fax: 516-488-0728
Email: sales@aagrilles.com

JOB #:

QUOTE #:

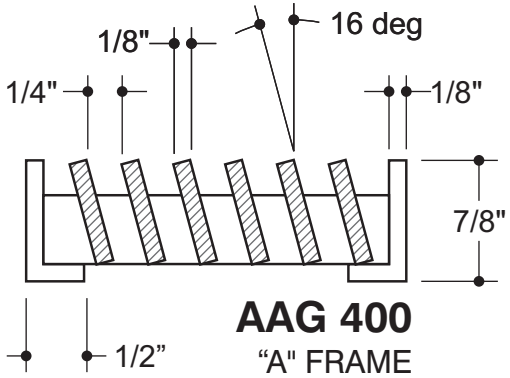

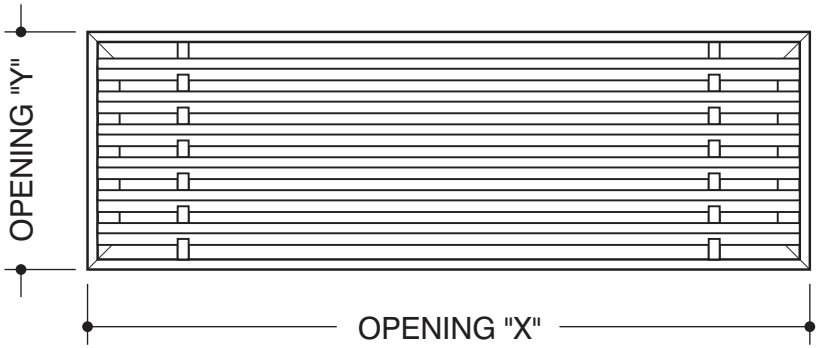

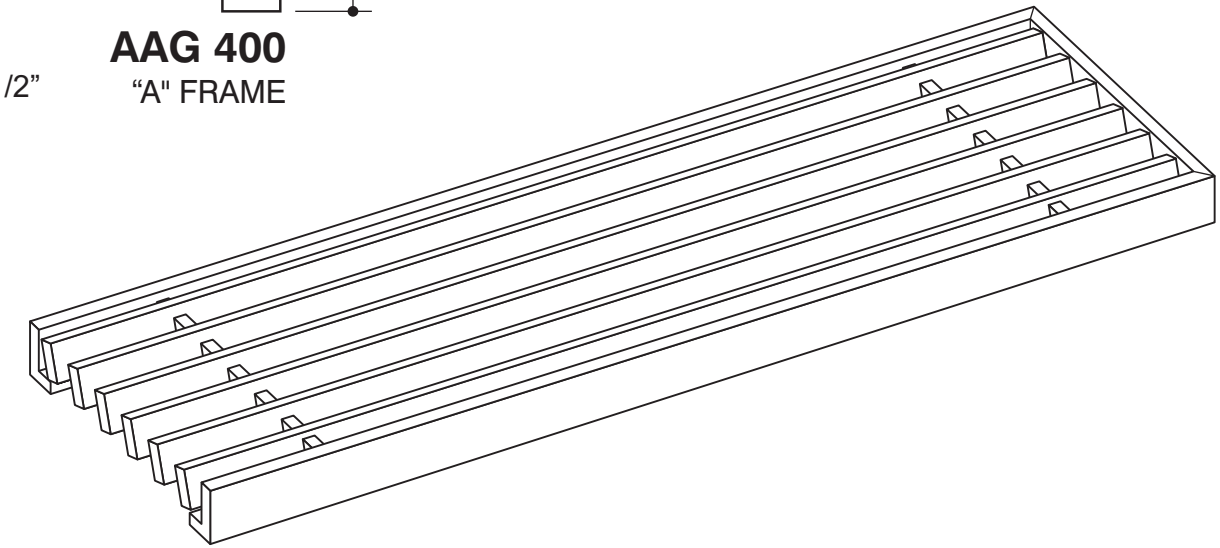

CORE STYLE
AAG-400

FRAME STYLE
"A"-frame

MATERIAL:

FINISH:

DEPTH: **7/8"**

OPENING SIZES

QTY	X	Y

CUSTOMER:	PROJECT:	NOTES:
CONTACT:	ARCHITECT:	
PHONE:	ENGINEER:	
	CONTRACTOR:	

Artistry *in* Architectural Grilles *by* Advanced Architectural Grilleworks

ADVANCED ARCH GRILLES
149 Denton Avenue, New Hyde Park, NY 11040
Voice: 516-488-0628 Fax: 516-488-0728
Email: sales@aagrilles.com

JOB #:

QUOTE #:

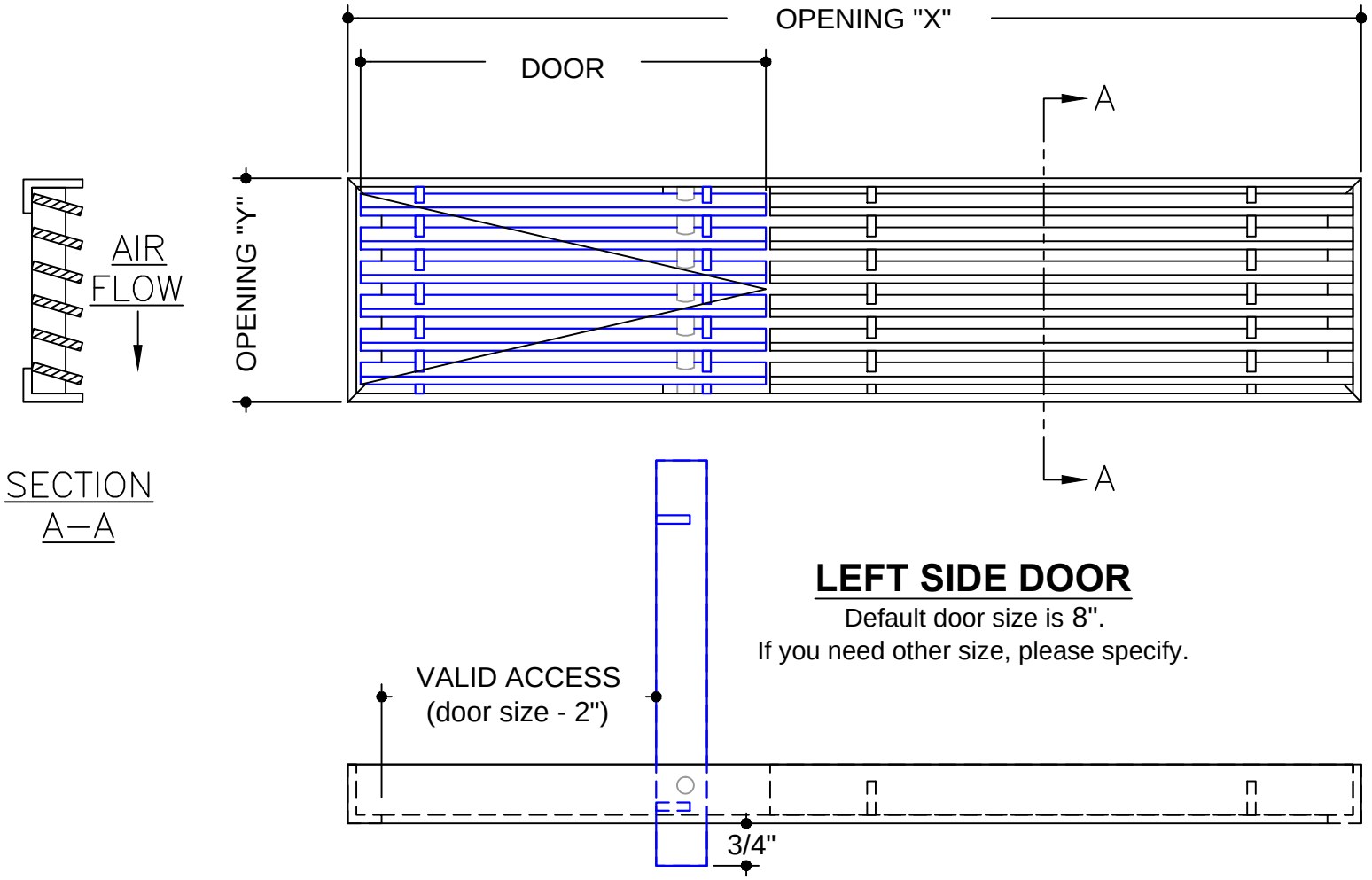

LEFT SIDE DOOR

Default door size is 8".
If you need other size, please specify.

CORE STYLE
AAG-400

FRAME STYLE
"A"-frame

MATERIAL:

FINISH:

DEPTH: **7/8”**

DOOR SIZE:

OPENING SIZES

QTY	X	Y

CUSTOMER:	PROJECT:	NOTES:
CONTACT:	ARCHITECT:	
PHONE:	ENGINEER:	
	CONTRACTOR:	

Artistry *in* Architectural Grilles *by* Advanced Architectural Grilleworks

ADVANCED ARCH GRILLES
149 Denton Avenue, New Hyde Park, NY 11040
Voice: 516-488-0628 Fax: 516-488-0728
Email: sales@aagrilles.com

JOB #:

QUOTE #:

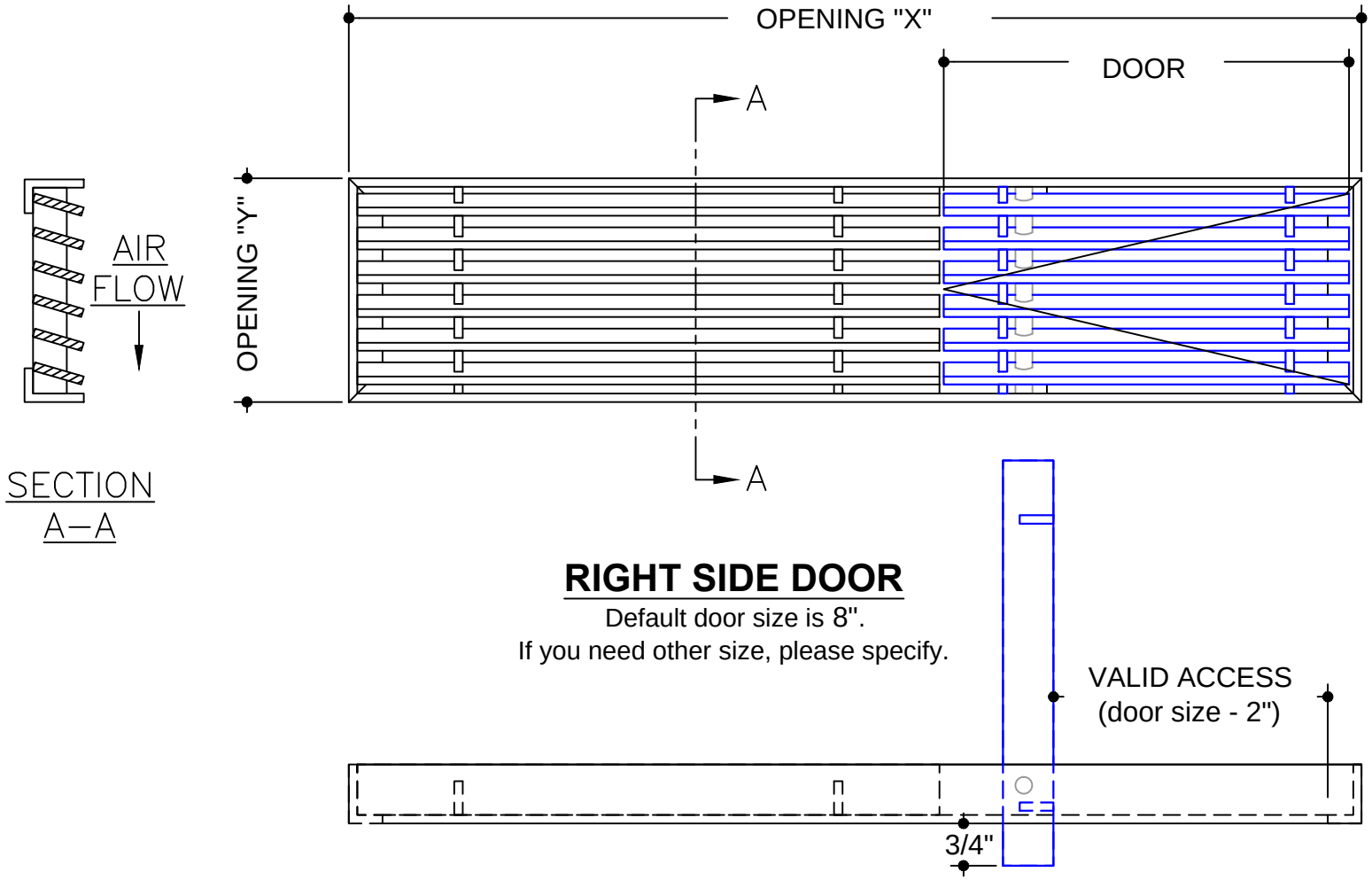

RIGHT SIDE DOOR

Default door size is 8".
If you need other size, please specify.

CORE STYLE
AAG-400

FRAME STYLE
"A"-frame

MATERIAL:

FINISH:

DEPTH: **7/8”**

DOOR SIZE:

OPENING SIZES

QTY	X	Y

CUSTOMER:	PROJECT:	NOTES:
CONTACT:	ARCHITECT:	
PHONE:	ENGINEER:	
	CONTRACTOR:	

Artistry *in* Architectural Grilles *by* Advanced Architectural Grilleworks

ADVANCED ARCH GRILLES
149 Denton Avenue, New Hyde Park, NY 11040
Voice: 516-488-0628 Fax: 516-488-0728
Email: sales@aagrilles.com

JOB #:

QUOTE #:

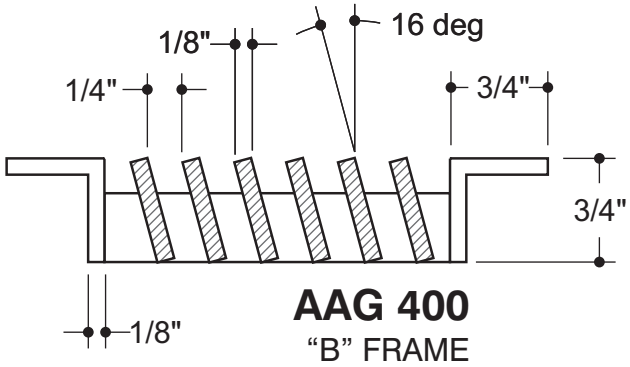

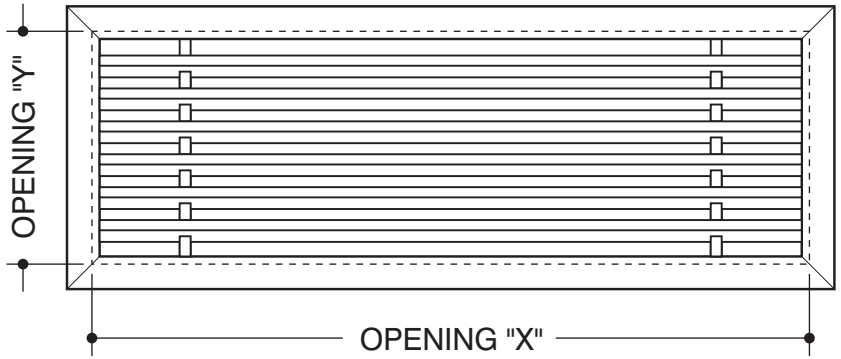

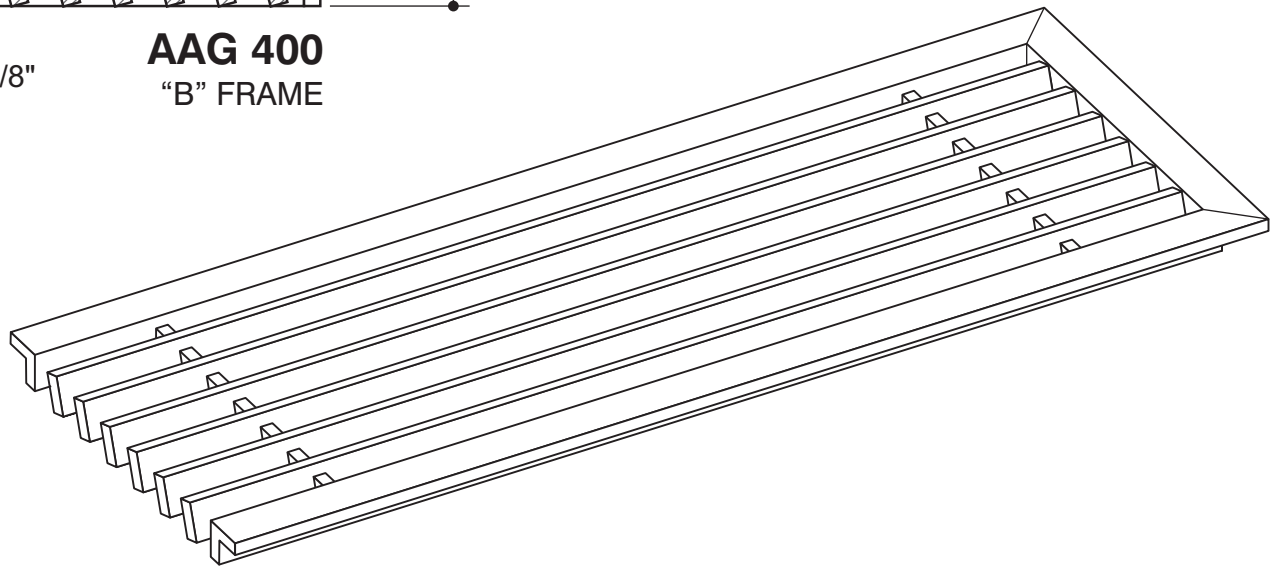

CORE STYLE
AAG-400

FRAME STYLE
"B"-frame

MATERIAL:

FINISH:

DEPTH: **3/4"**

OPENING SIZES

QTY	X	Y

CUSTOMER:	PROJECT:	NOTES:
CONTACT:	ARCHITECT:	
	ENGINEER:	
PHONE:	CONTRACTOR:	

Artistry *in* Architectural Grilles *by* Advanced Architectural Grilleworks

ADVANCED ARCH GRILLES
149 Denton Avenue, New Hyde Park, NY 11040
Voice: 516-488-0628 Fax: 516-488-0728
Email: sales@aagrilles.com

JOB #:

QUOTE #:

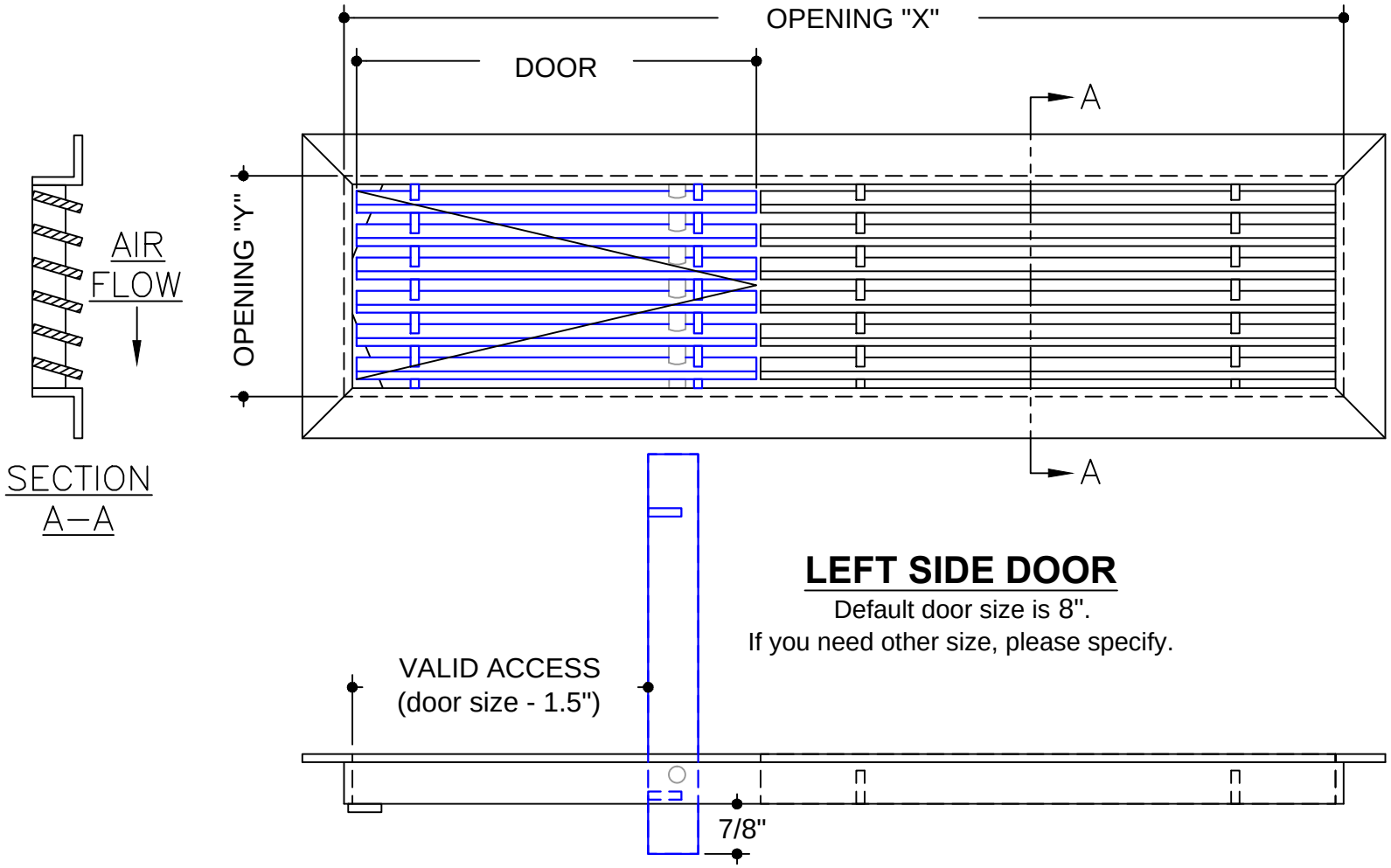

LEFT SIDE DOOR

Default door size is 8".
If you need other size, please specify.

CORE STYLE
AAG-400

FRAME STYLE
"B"-frame

MATERIAL:

FINISH:

DEPTH: **3/4”**

DOOR SIZE:

OPENING SIZES

QTY	X	Y

CUSTOMER:	PROJECT:	NOTES:
CONTACT:	ARCHITECT:	
PHONE:	ENGINEER:	
	CONTRACTOR:	

Artistry *in* Architectural Grilles *by* Advanced Architectural Grilleworks

ADVANCED ARCH GRILLES
149 Denton Avenue, New Hyde Park, NY 11040
Voice: 516-488-0628 Fax: 516-488-0728
Email: sales@aagrilles.com

JOB #:

QUOTE #:

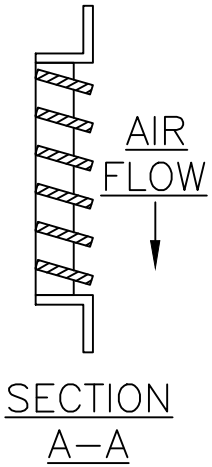

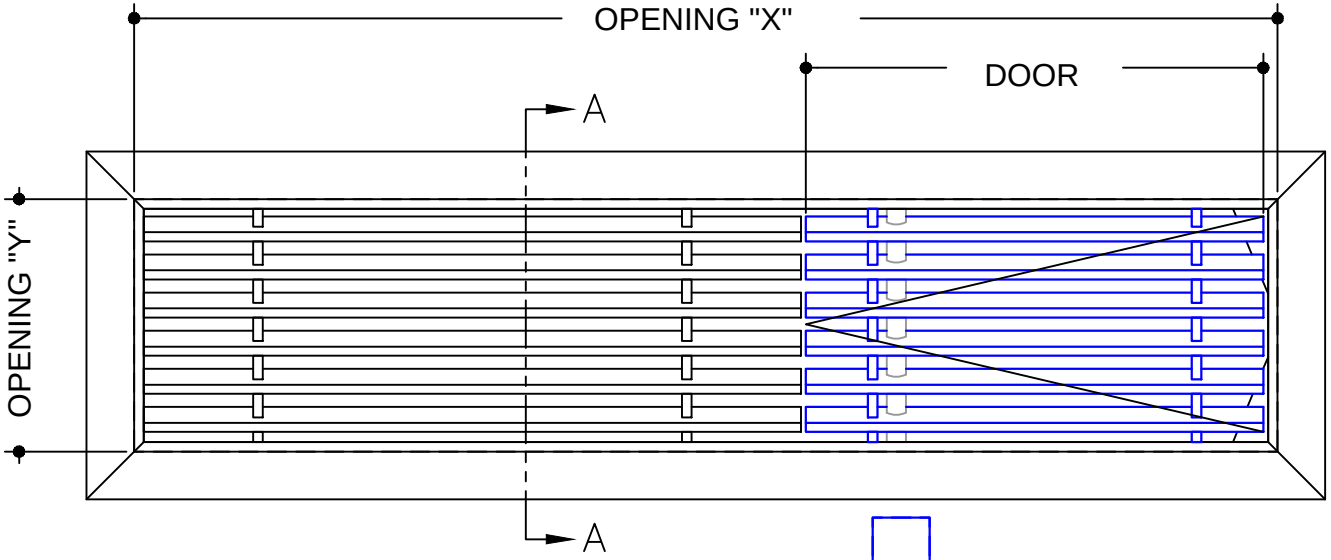

RIGHT SIDE DOOR

Default door size is 8".
If you need other size, please specify.

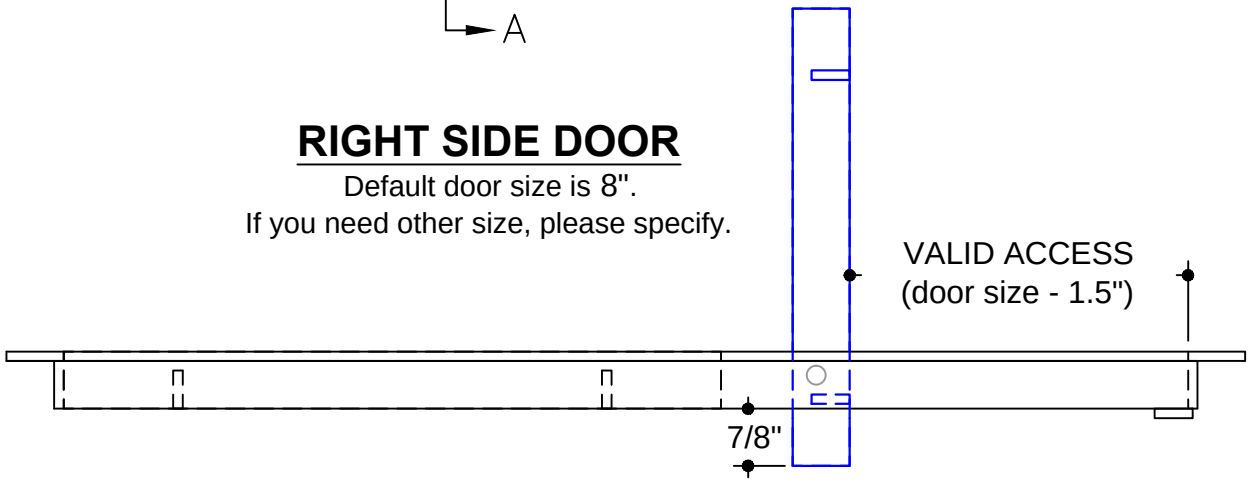

CORE STYLE
AAG-400

FRAME STYLE
"B"-frame

MATERIAL:

FINISH:

DEPTH: **3/4”**

DOOR SIZE:

OPENING SIZES

QTY	X	Y

CUSTOMER:	PROJECT:	NOTES:
CONTACT:	ARCHITECT:	
	ENGINEER:	
PHONE:	CONTRACTOR:	

Artistry *in* Architectural Grilles *by* Advanced Architectural Grilleworks

ADVANCED ARCH GRILLES
149 Denton Avenue, New Hyde Park, NY 11040
Voice: 516-488-0628 Fax: 516-488-0728
Email: sales@aagrilles.com

JOB #:

QUOTE #:

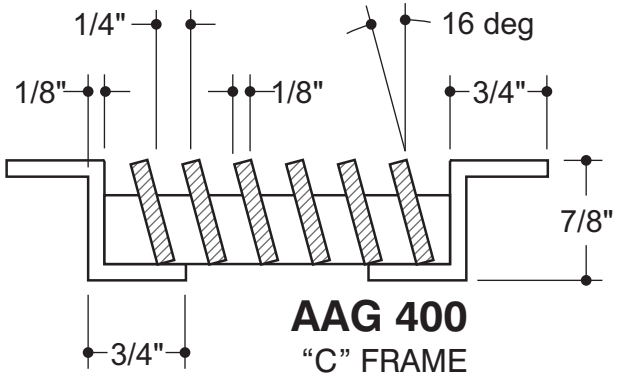

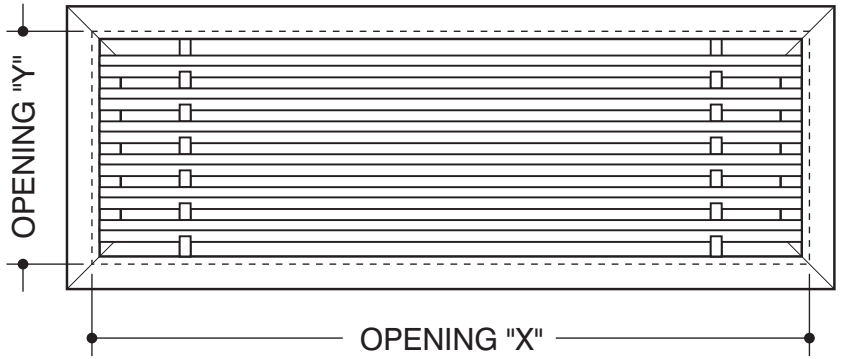

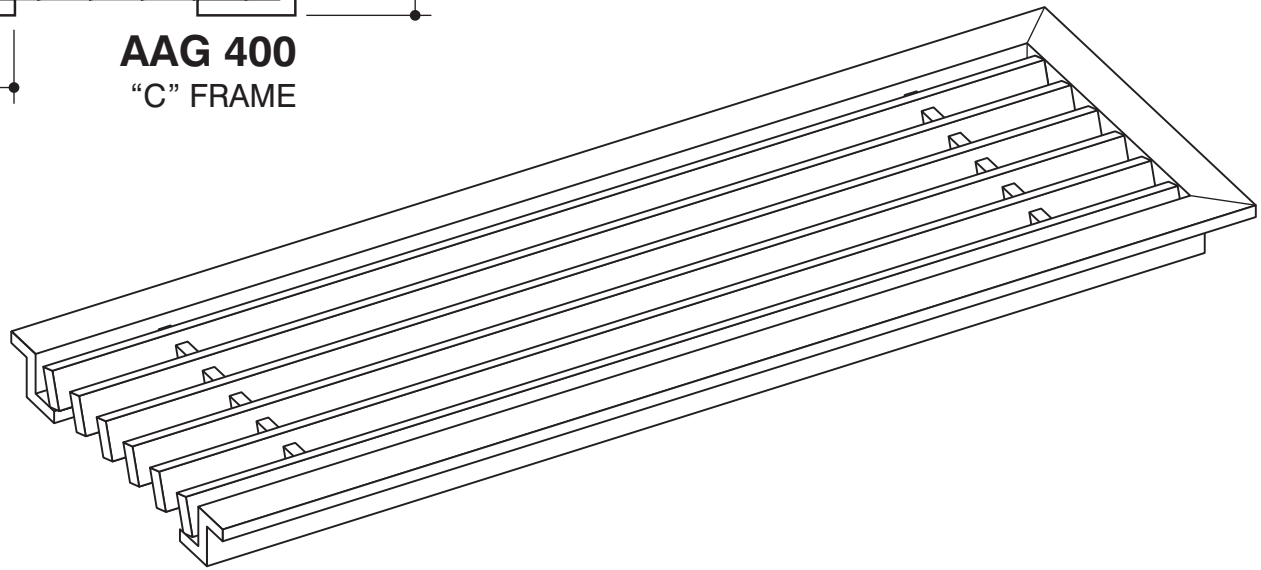

CORE STYLE
AAG-400

FRAME STYLE
"C"-frame

MATERIAL:

FINISH:

DEPTH: **7/8"**

OPENING SIZES

QTY	X	Y

CUSTOMER:	PROJECT:	NOTES:
CONTACT:	ARCHITECT:	
PHONE:	ENGINEER:	
	CONTRACTOR:	

Artistry *in* Architectural Grilles *by* Advanced Architectural Grilleworks

ADVANCED ARCH GRILLES
149 Denton Avenue, New Hyde Park, NY 11040
Voice: 516-488-0628 Fax: 516-488-0728
Email: sales@aagrilles.com

JOB #:

QUOTE #:

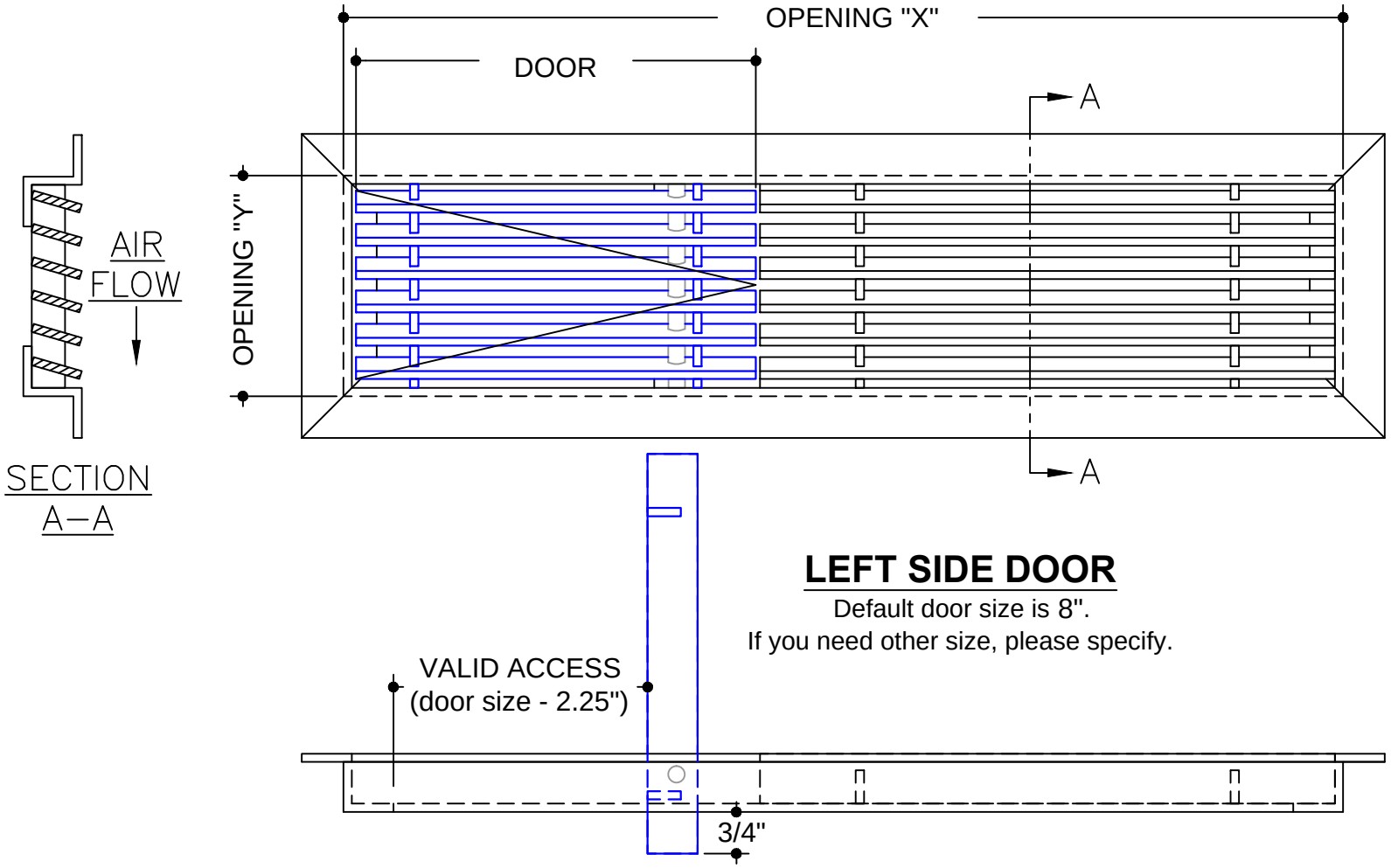

LEFT SIDE DOOR

Default door size is 8".
If you need other size, please specify.

CORE STYLE
AAG-400

FRAME STYLE
"C"-frame

MATERIAL:

FINISH:

DEPTH: **7/8”**

DOOR SIZE:

OPENING SIZES

QTY	X	Y

CUSTOMER:	PROJECT:	NOTES:
CONTACT:	ARCHITECT:	
	ENGINEER:	
PHONE:	CONTRACTOR:	

Artistry *in* Architectural Grilles *by* Advanced Architectural Grilleworks

ADVANCED ARCH GRILLES
149 Denton Avenue, New Hyde Park, NY 11040
Voice: 516-488-0628 Fax: 516-488-0728
Email: sales@aagrilles.com

JOB #:

QUOTE #:

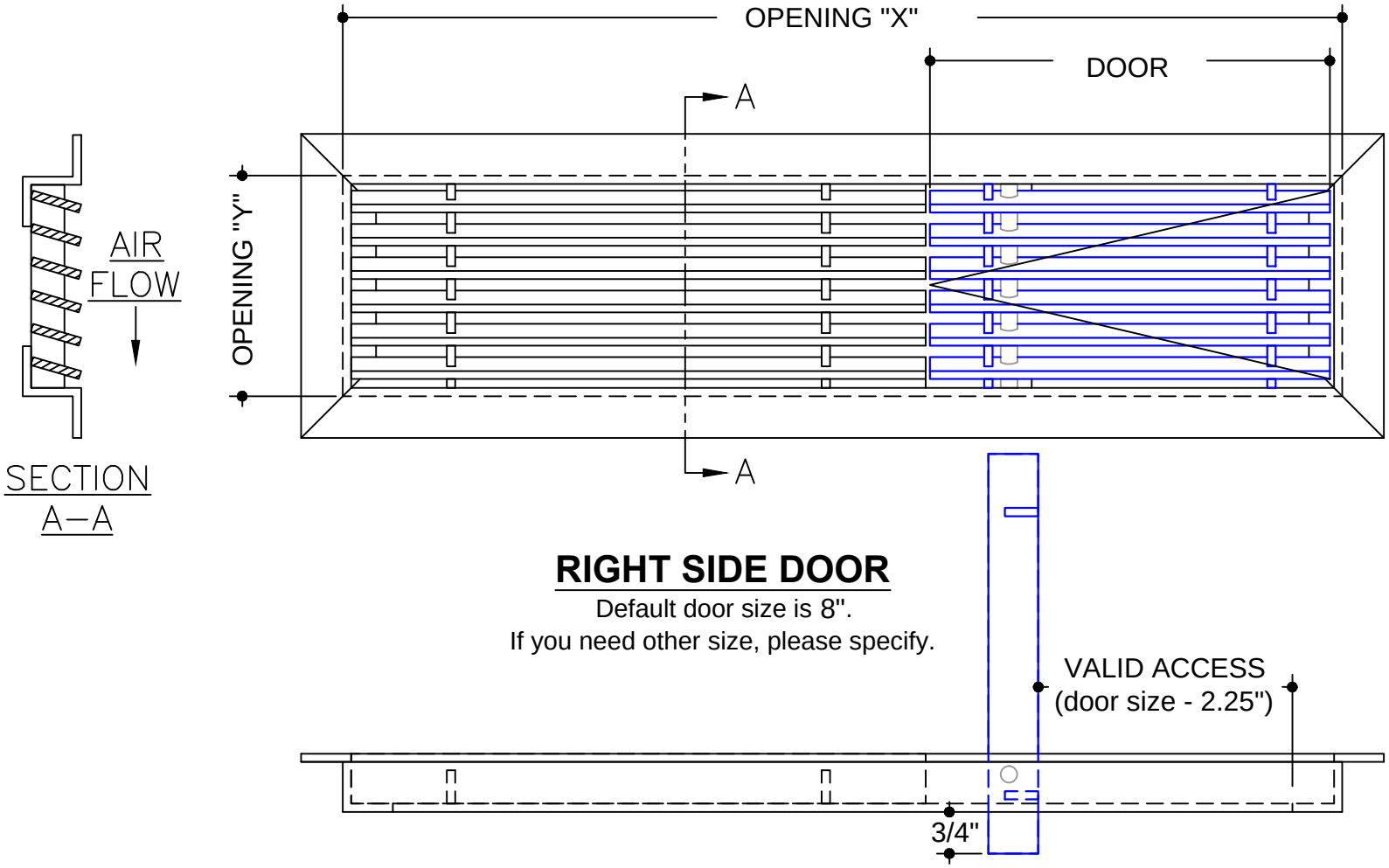

CORE STYLE
AAG-400

FRAME STYLE
"C"-frame

MATERIAL:

FINISH:

DEPTH: **7/8”**

DOOR SIZE:

OPENING SIZES

QTY	X	Y

CUSTOMER:	PROJECT:	NOTES:
CONTACT:	ARCHITECT:	
	ENGINEER:	
PHONE:	CONTRACTOR:	

Artistry *in* Architectural Grilles *by* Advanced Architectural Grilleworks

ADVANCED ARCH GRILLES
149 Denton Avenue, New Hyde Park, NY 11040
Voice: 516-488-0628 Fax: 516-488-0728
Email: sales@aagrilles.com

JOB #:

QUOTE #:

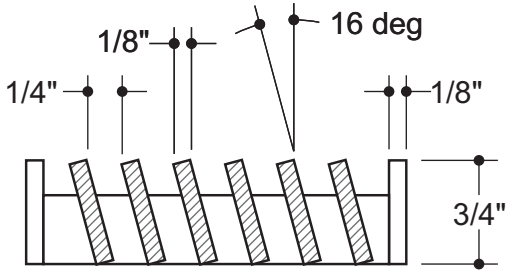

AAG 400
BAND FRAME

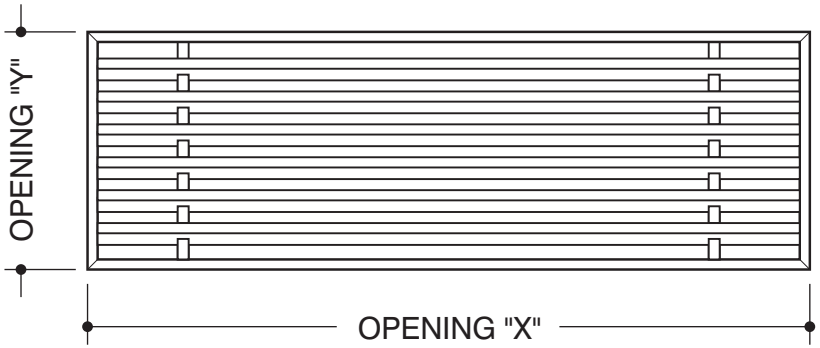

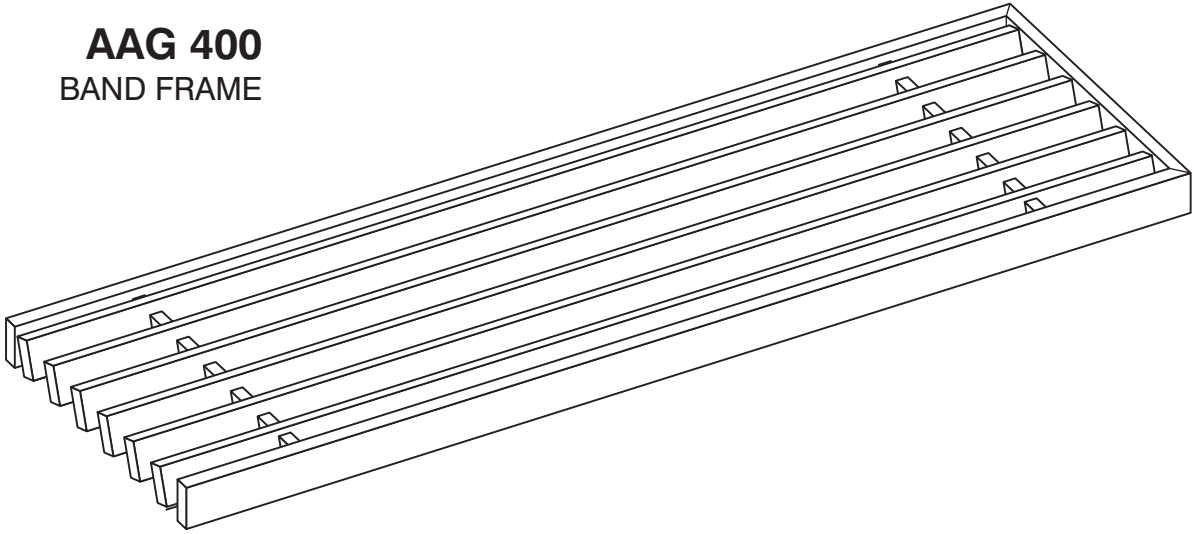

CORE STYLE
AAG-400

FRAME STYLE
Band Frame

MATERIAL:

FINISH:

DEPTH: **3/4”**

OPENING SIZES

QTY	X	Y

CUSTOMER:	PROJECT:	NOTES:
CONTACT:	ARCHITECT:	
	ENGINEER:	
PHONE:	CONTRACTOR:	

Artistry *in* Architectural Grilles *by* Advanced Architectural Grilleworks

ADVANCED ARCH GRILLES
149 Denton Avenue, New Hyde Park, NY 11040
Voice: 516-488-0628 Fax: 516-488-0728
Email: sales@aagrilles.com

JOB #:

QUOTE #:

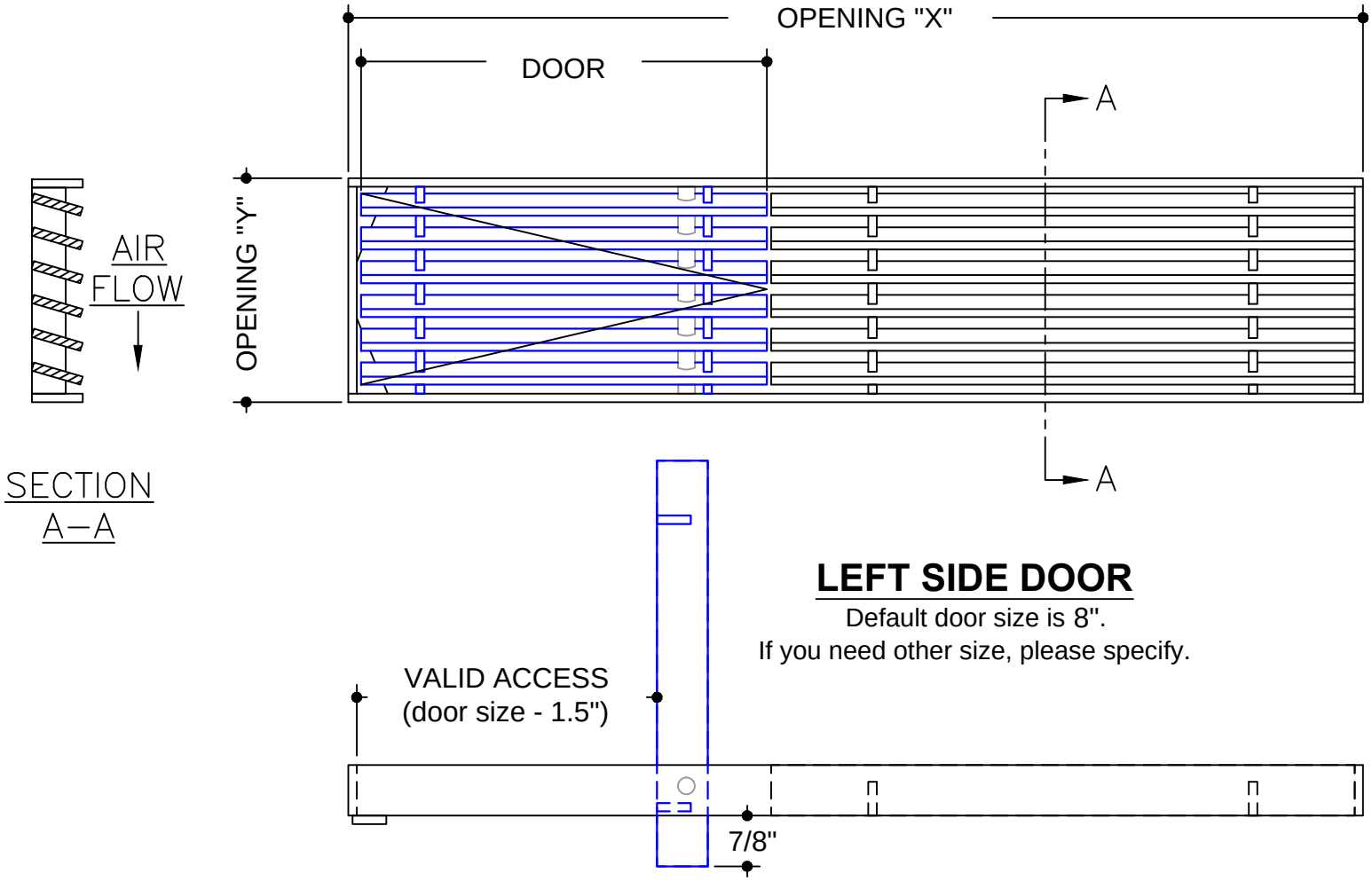

LEFT SIDE DOOR

Default door size is 8".
If you need other size, please specify.

CORE STYLE
AAG-400

FRAME STYLE
Band Frame

MATERIAL:

FINISH:

DEPTH: **3/4”**

DOOR SIZE:

OPENING SIZES

QTY	X	Y

CUSTOMER:	PROJECT:	NOTES:
CONTACT:	ARCHITECT:	
PHONE:	ENGINEER:	
	CONTRACTOR:	

Artistry *in* Architectural Grilles *by* Advanced Architectural Grilleworks

ADVANCED ARCH GRILLES
149 Denton Avenue, New Hyde Park, NY 11040
Voice: 516-488-0628 Fax: 516-488-0728
Email: sales@aagrilles.com

JOB #:

QUOTE #:

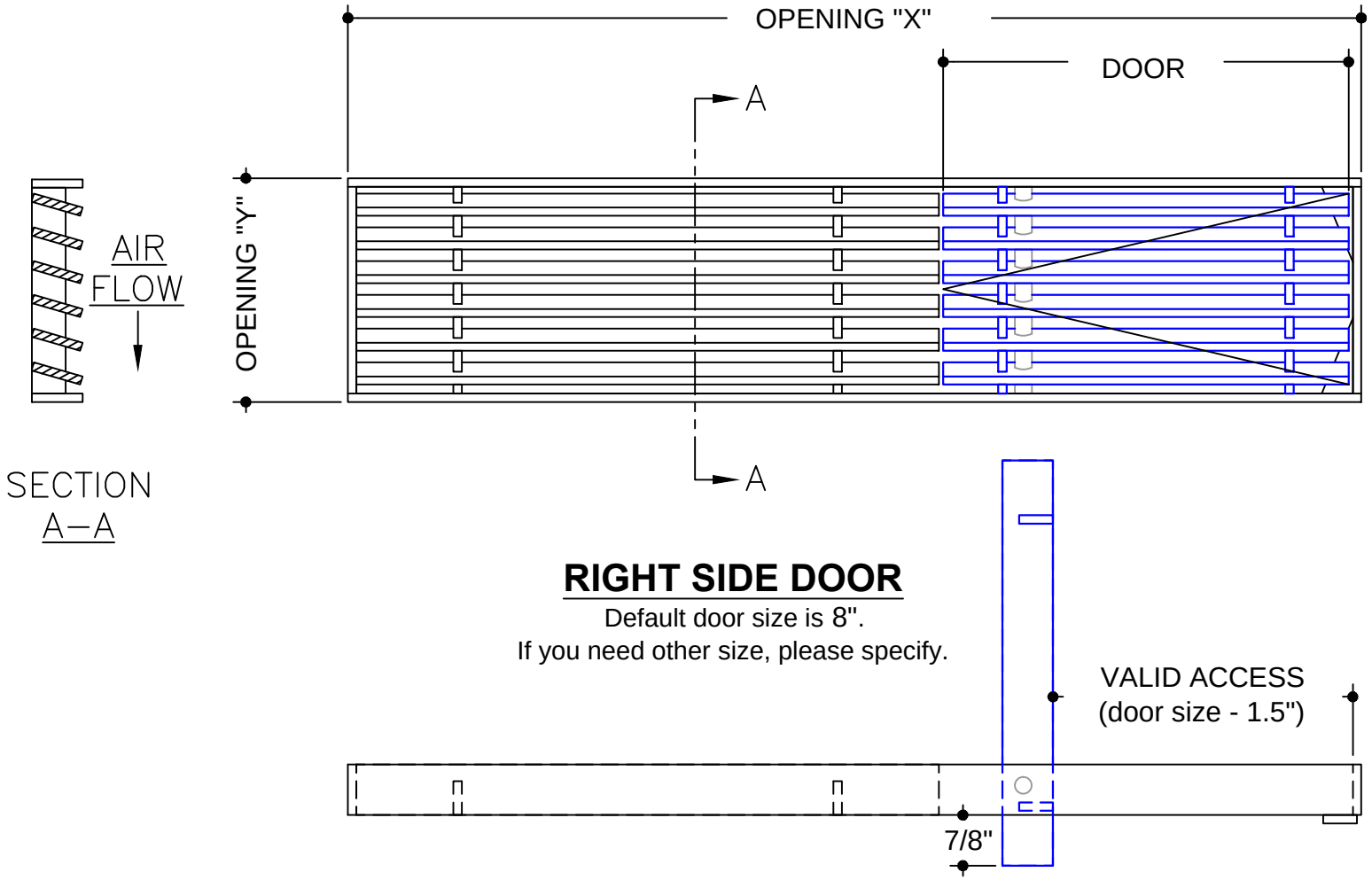

CORE STYLE
AAG-400

FRAME STYLE
Band Frame

MATERIAL:

FINISH:

DEPTH: **3/4”**

DOOR SIZE:

OPENING SIZES

QTY	X	Y

CUSTOMER:	PROJECT:	NOTES:
CONTACT:	ARCHITECT:	
PHONE:	ENGINEER:	
	CONTRACTOR:	

Artistry *in* Architectural Grilles *by* Advanced Architectural Grilleworks

ADVANCED ARCH GRILLES
149 Denton Avenue, New Hyde Park, NY 11040
Voice: 516-488-0628 Fax: 516-488-0728
Email: sales@aagrilles.com

JOB #:

QUOTE #:

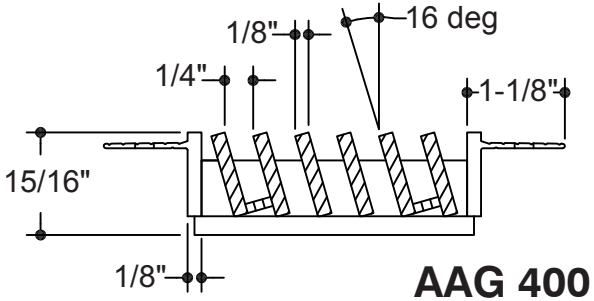

AAG 400
J Bead FRAME

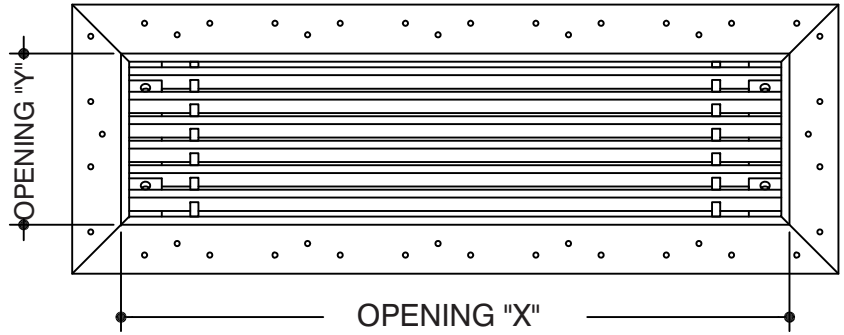

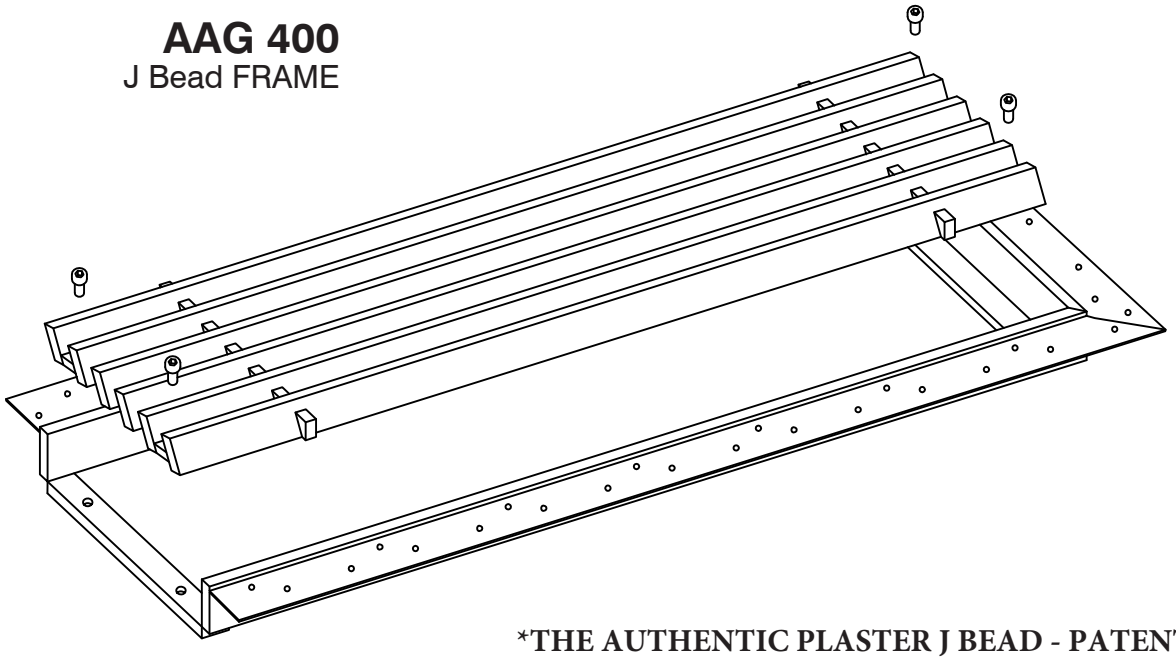

CORE STYLE
AAG-400

FRAME STYLE
J Bead*

MATERIAL:

FINISH:

DEPTH: **15/16”**

CORE: **REMOVABLE**

OPENING SIZES

QTY	X	Y

***THE AUTHENTIC PLASTER J BEAD - PATENT # 9,765,988**

CUSTOMER:	PROJECT:	NOTES:
CONTACT:	ARCHITECT:	
	ENGINEER:	
PHONE:	CONTRACTOR:	

Artistry *in* Architectural Grilles *by* Advanced Architectural Grilleworks

ADVANCED ARCH GRILLES
149 Denton Avenue, New Hyde Park, NY 11040
Voice: 516-488-0628 Fax: 516-488-0728
Email: sales@aagrilles.com

JOB #:

QUOTE #: